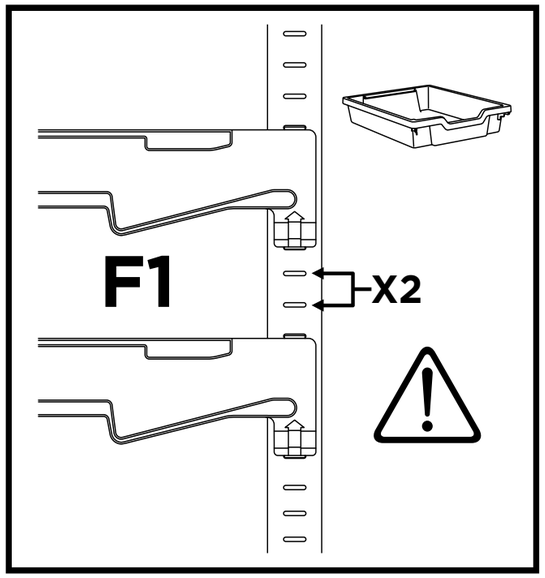

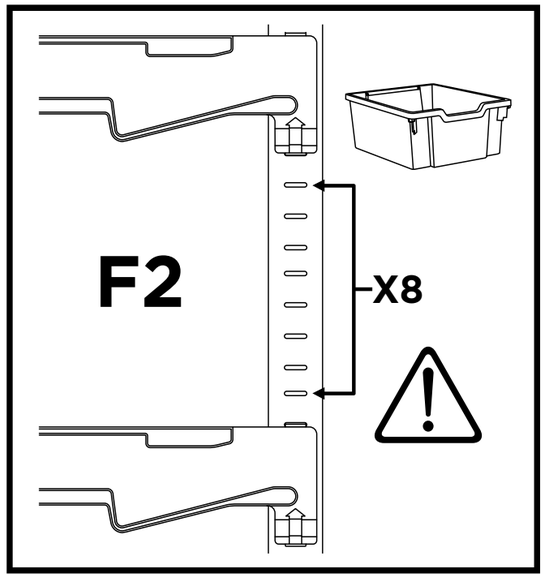

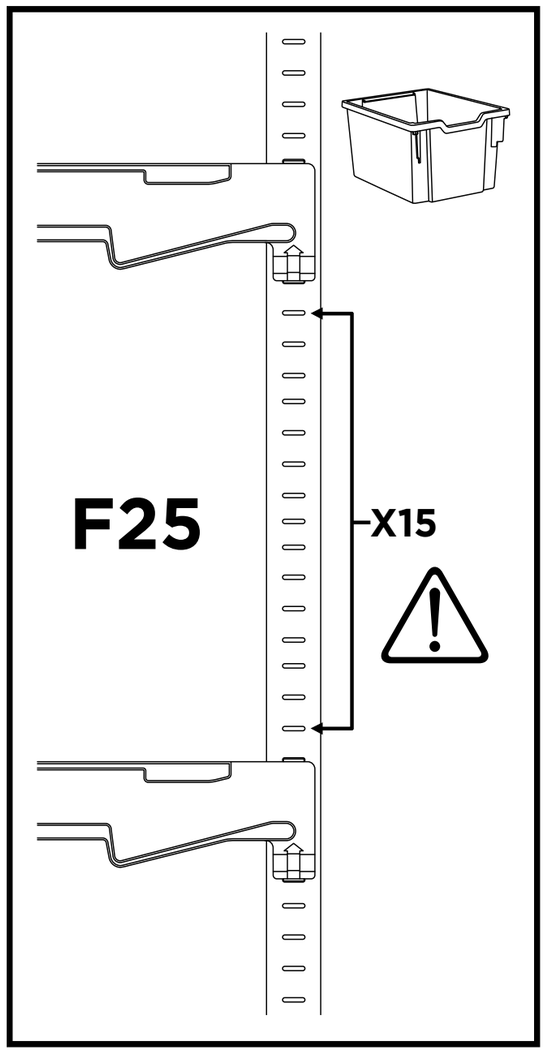

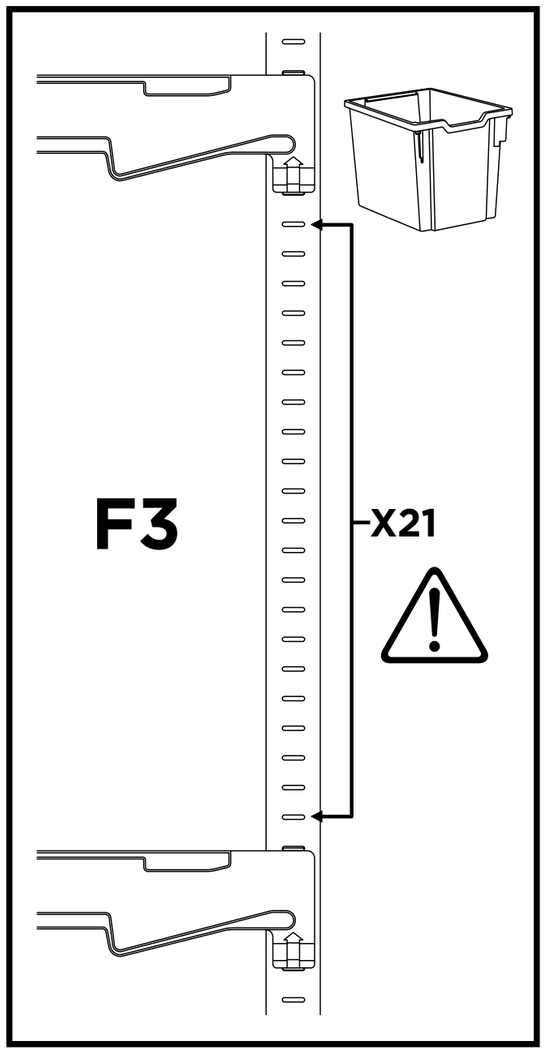

Custom callero

Storage with style.

Low Starter

Instruction Manual

Custom callero

Storage with style.

Double Column Unit

Dimensions: 995(H) x 690(W) x 430mm(D).

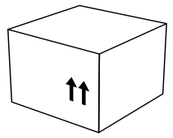

CFRA44 x 1
CFRF44 x 1
CFRH44 x 1

CFRA44

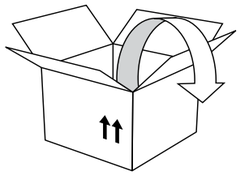

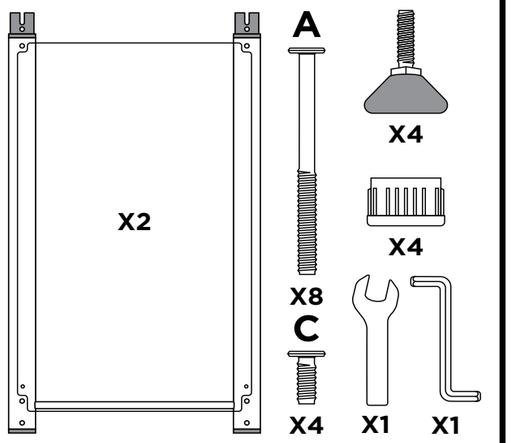

CFRH44

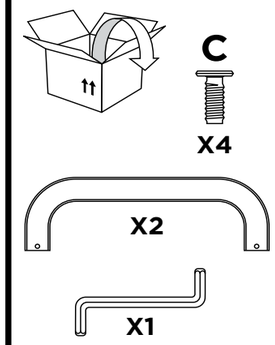

CFRF44

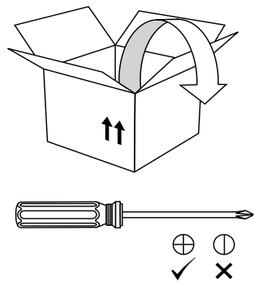

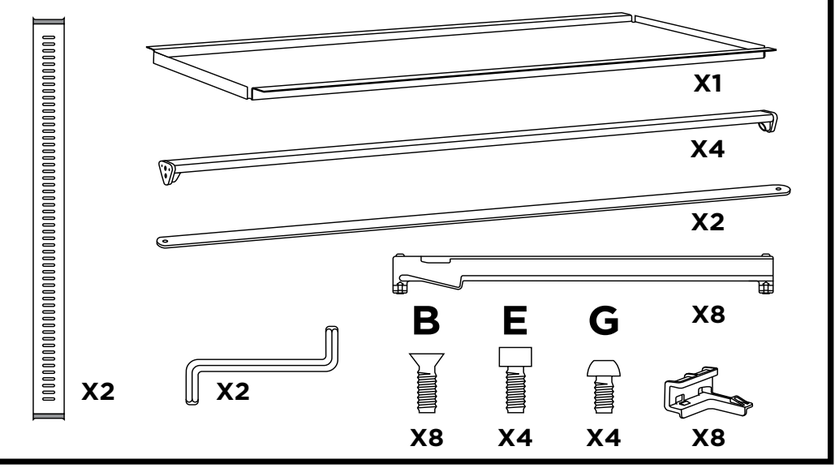

1

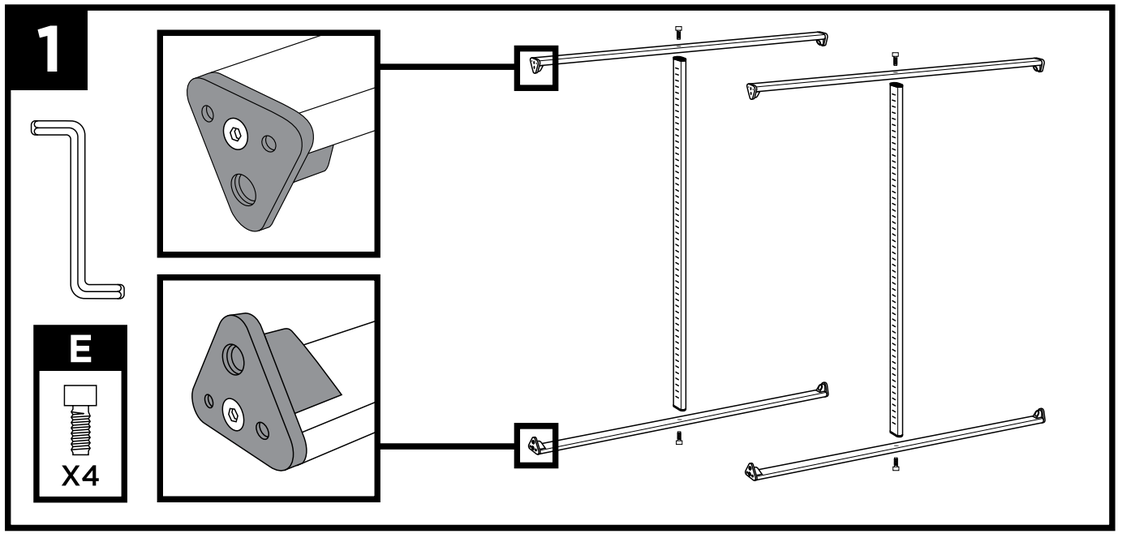

2

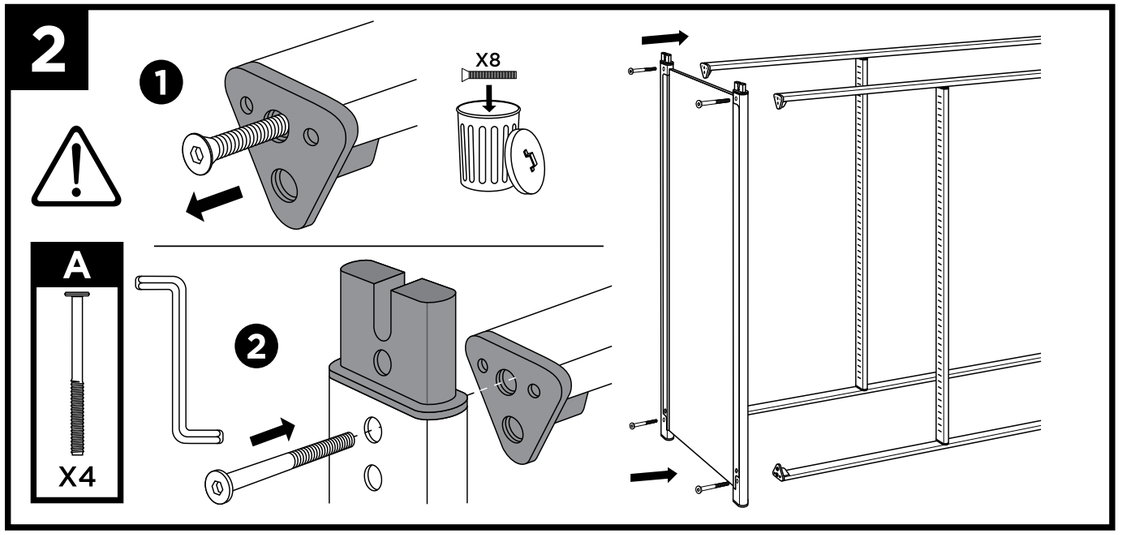

3

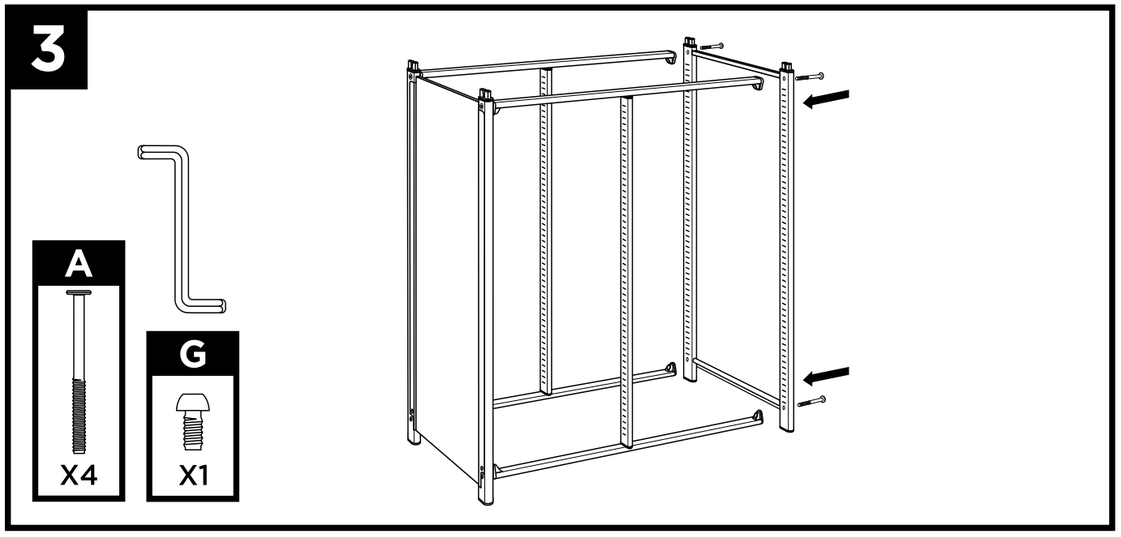

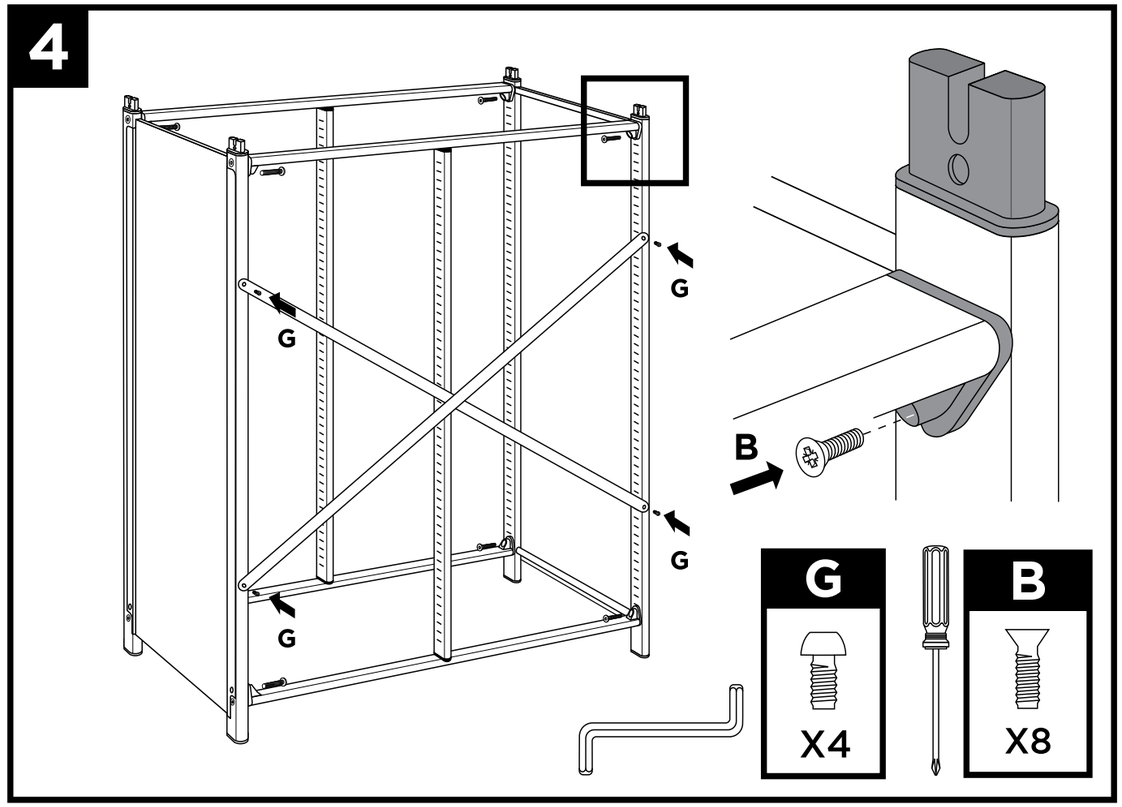
4
G
G
G
G
B
G
X4
B
X8

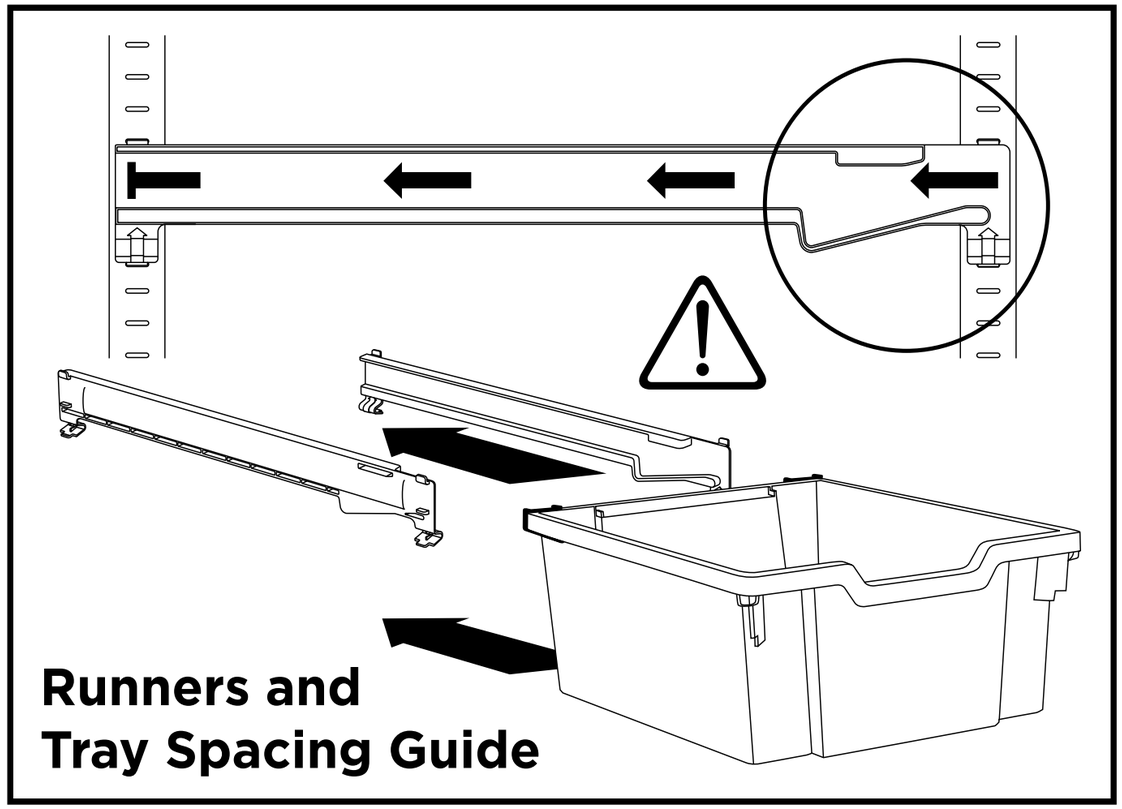
Runners and
Tray Spacing Guide

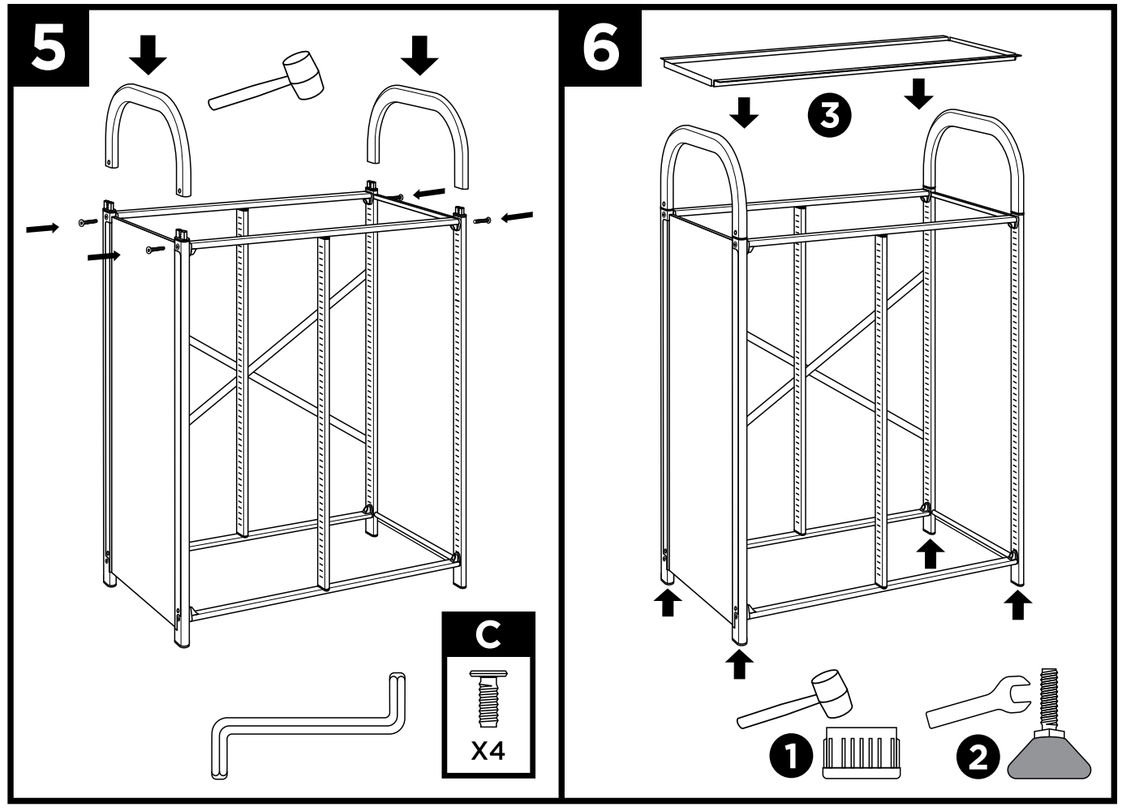
5
C
X4
6
3
1
2

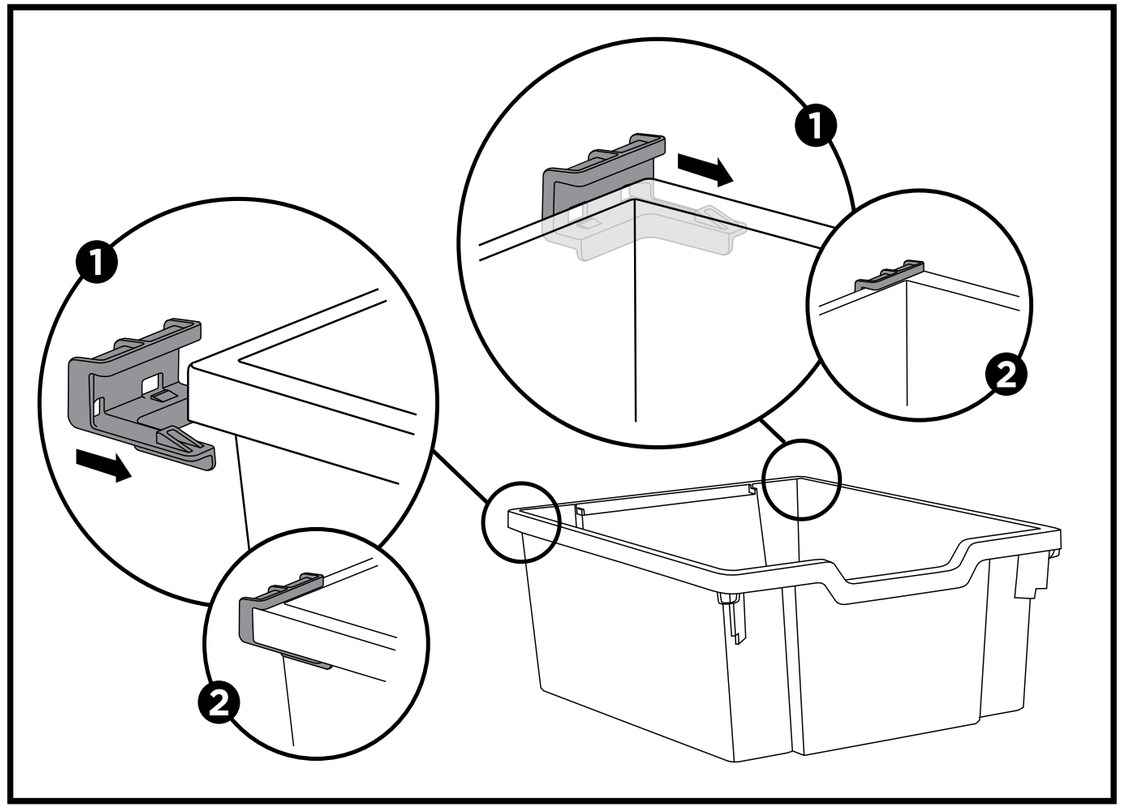
1
2
1
2

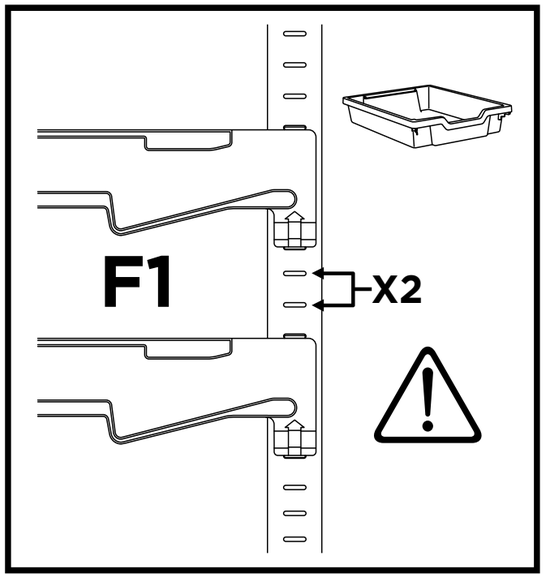

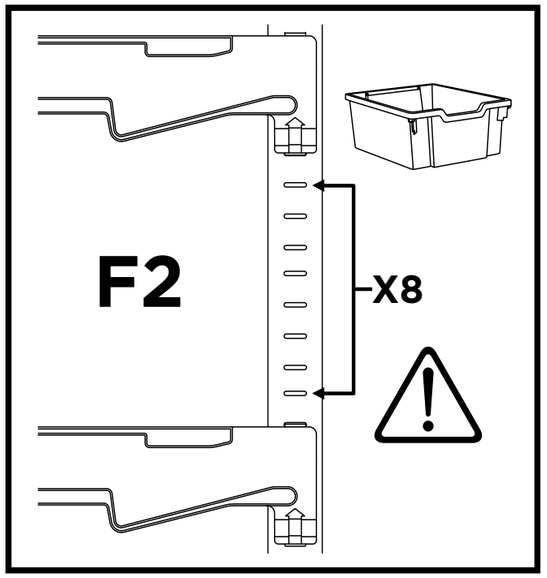

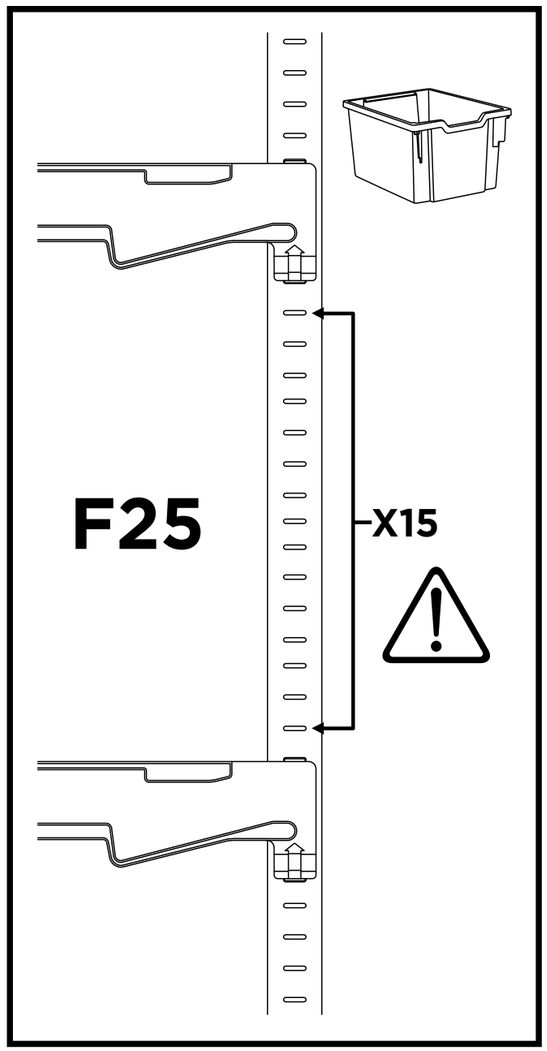

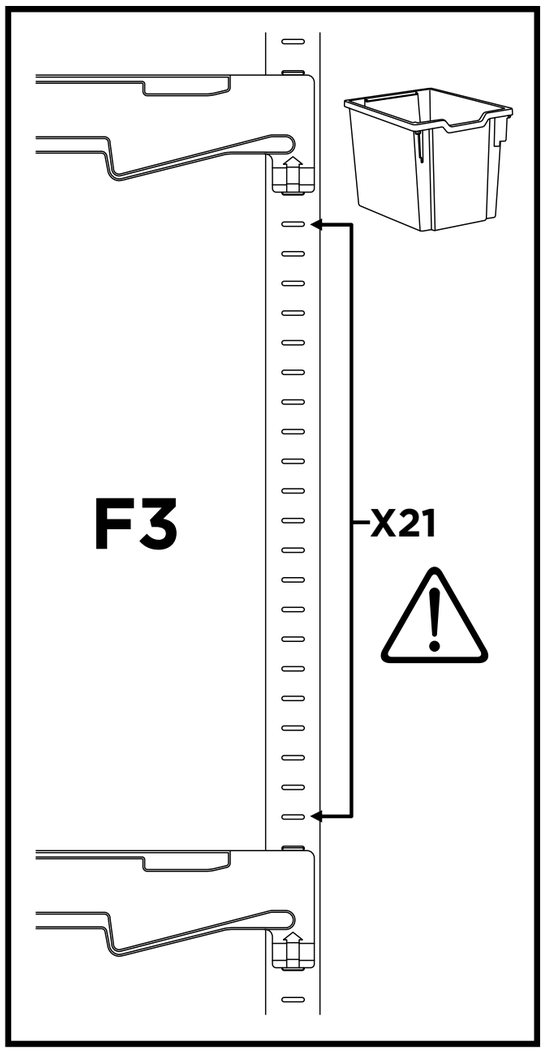

Custom
callero
Storage with style.

Treble Column Unit

Dimensions: 995(H) x 1025(W) x 430mm(D).

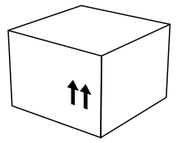

CFRA44 x 1
CFRC44 x 1
CFRH44 x 1

CFRA44

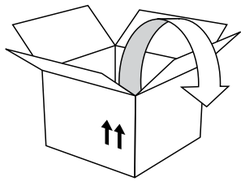

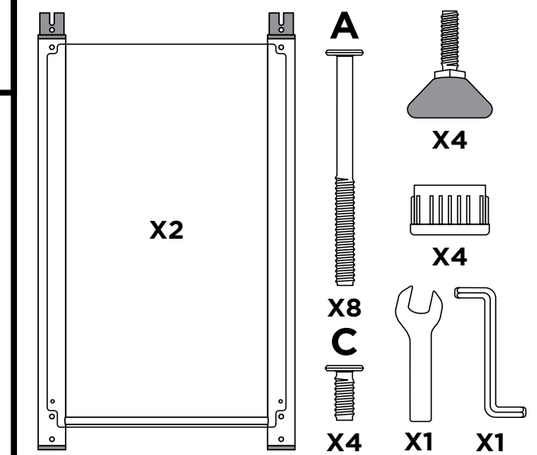

CFRH44

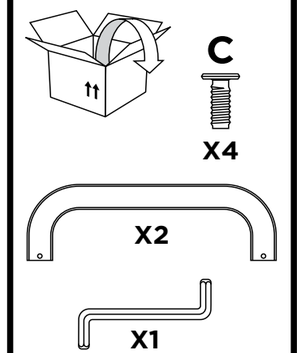

CFRC44

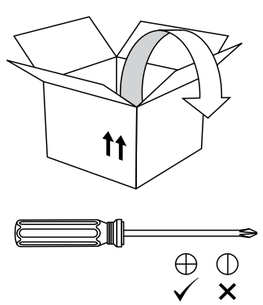

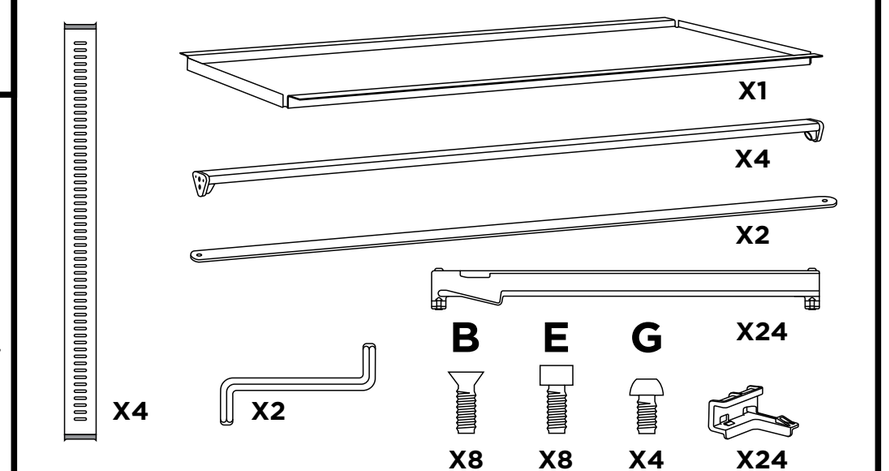

1

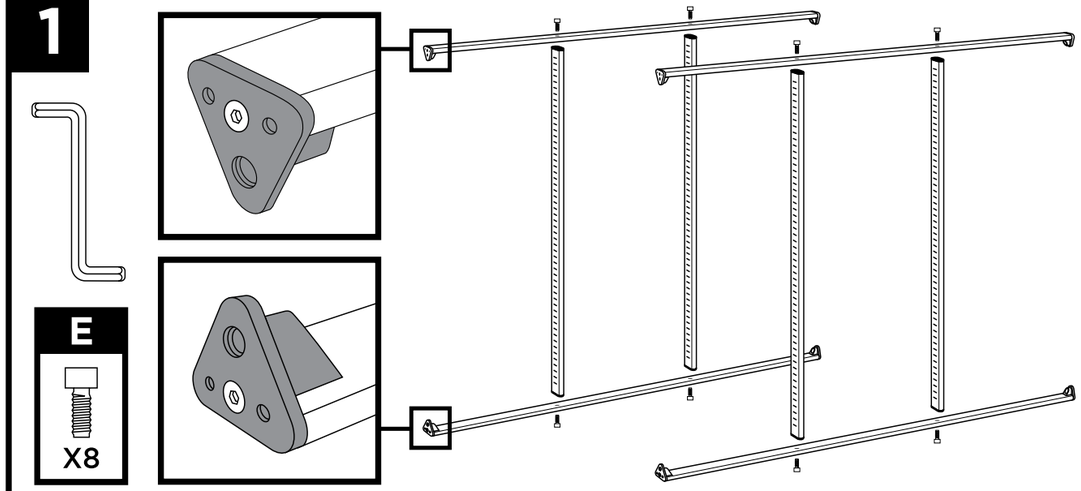

2

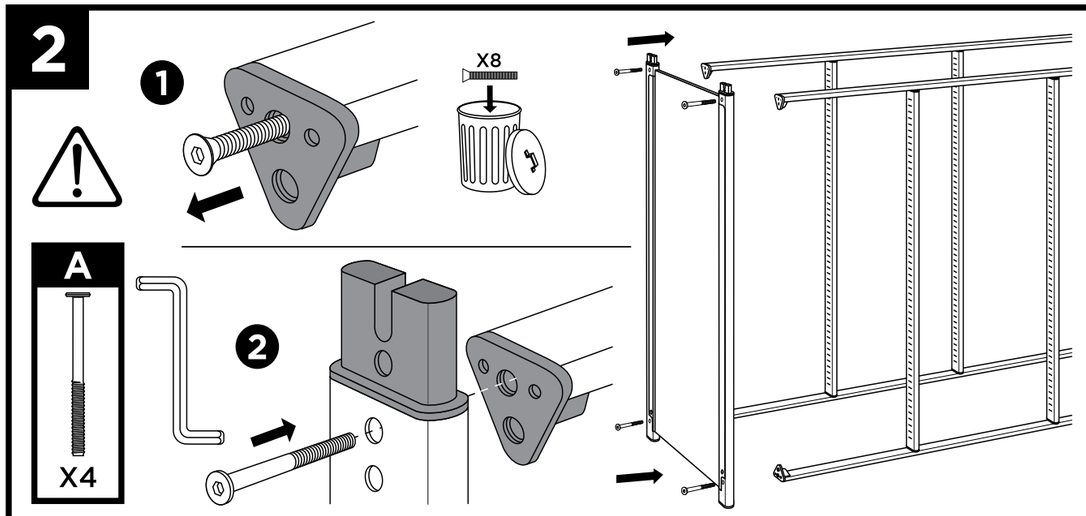

3

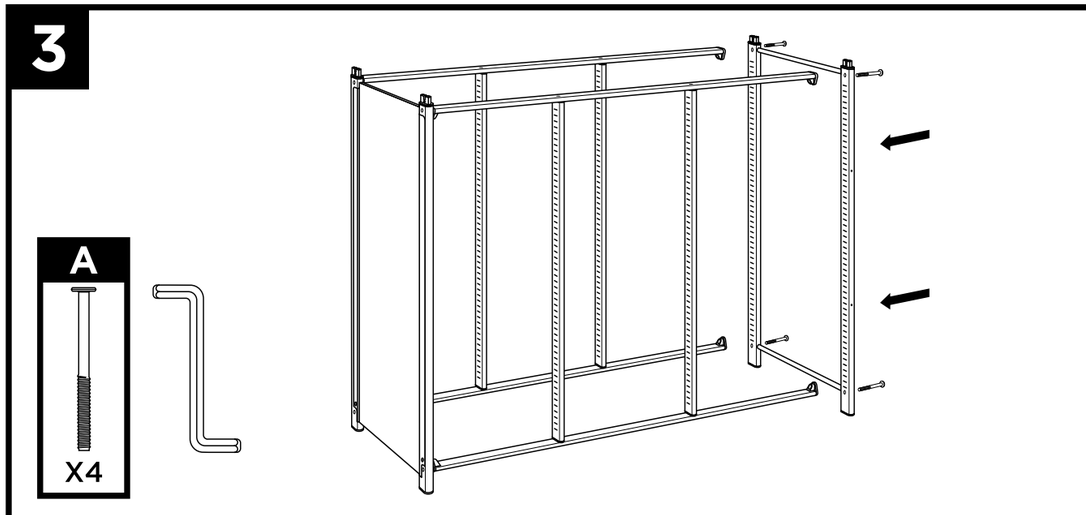

4

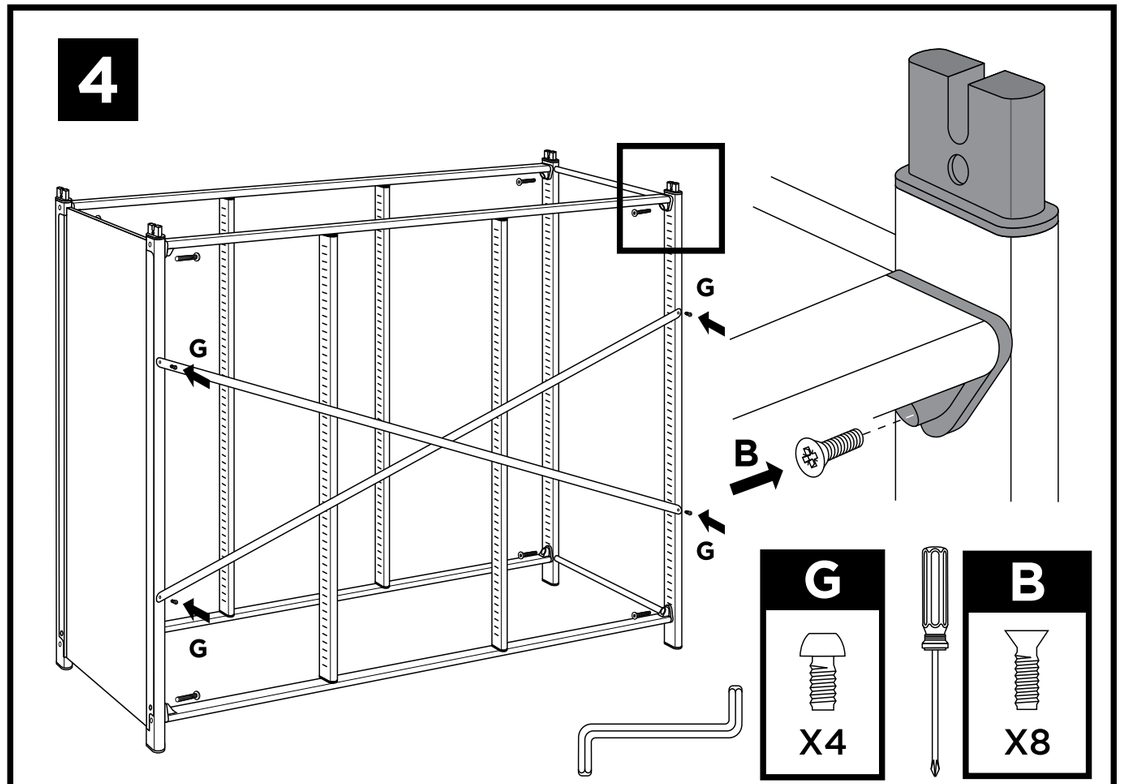

5

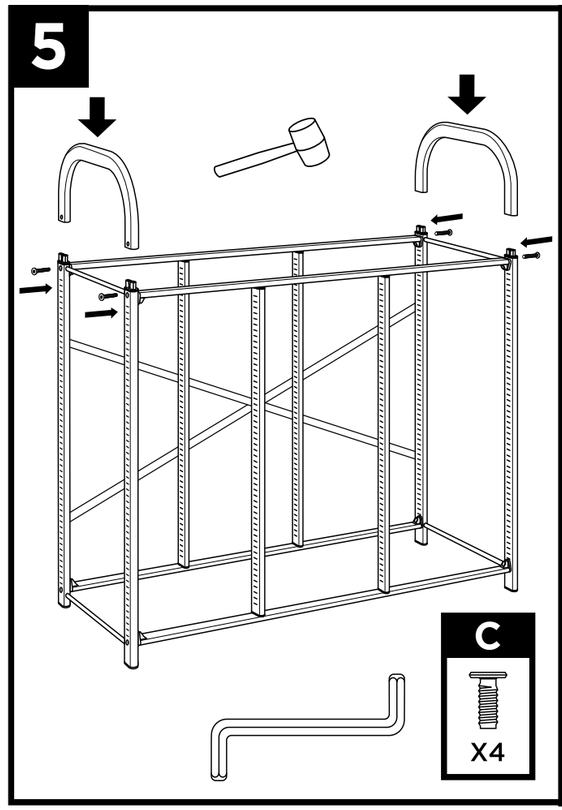

6

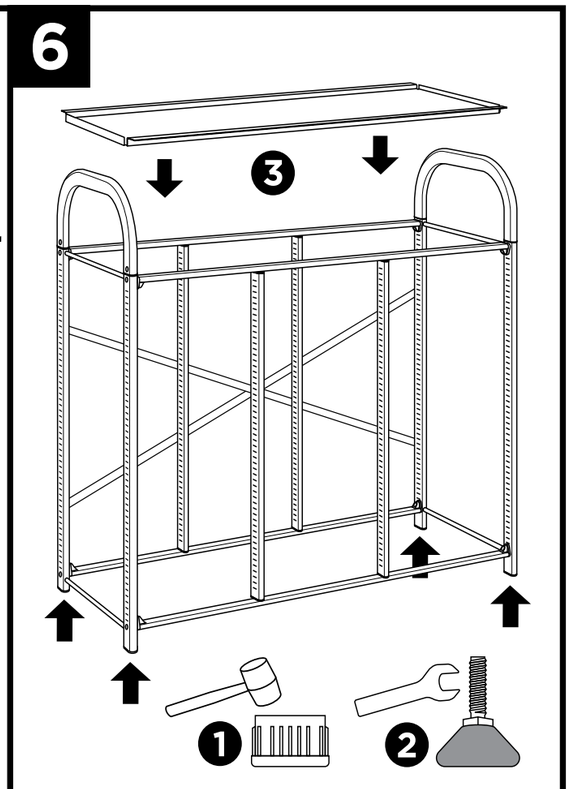

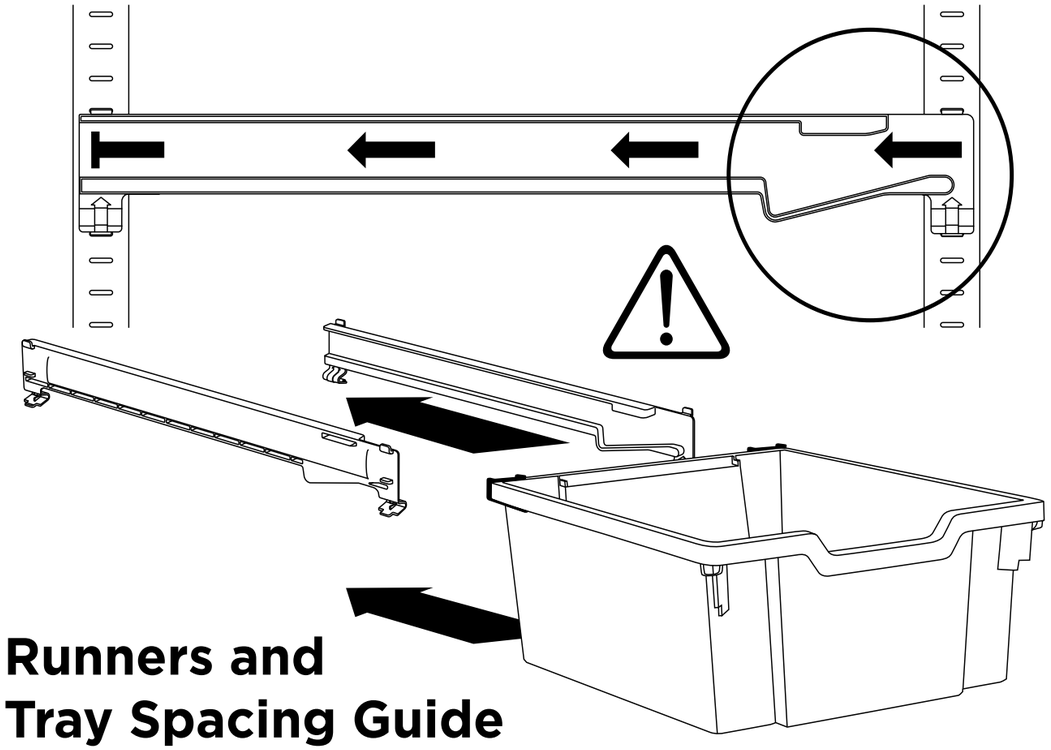

Runners and Tray Spacing Guide

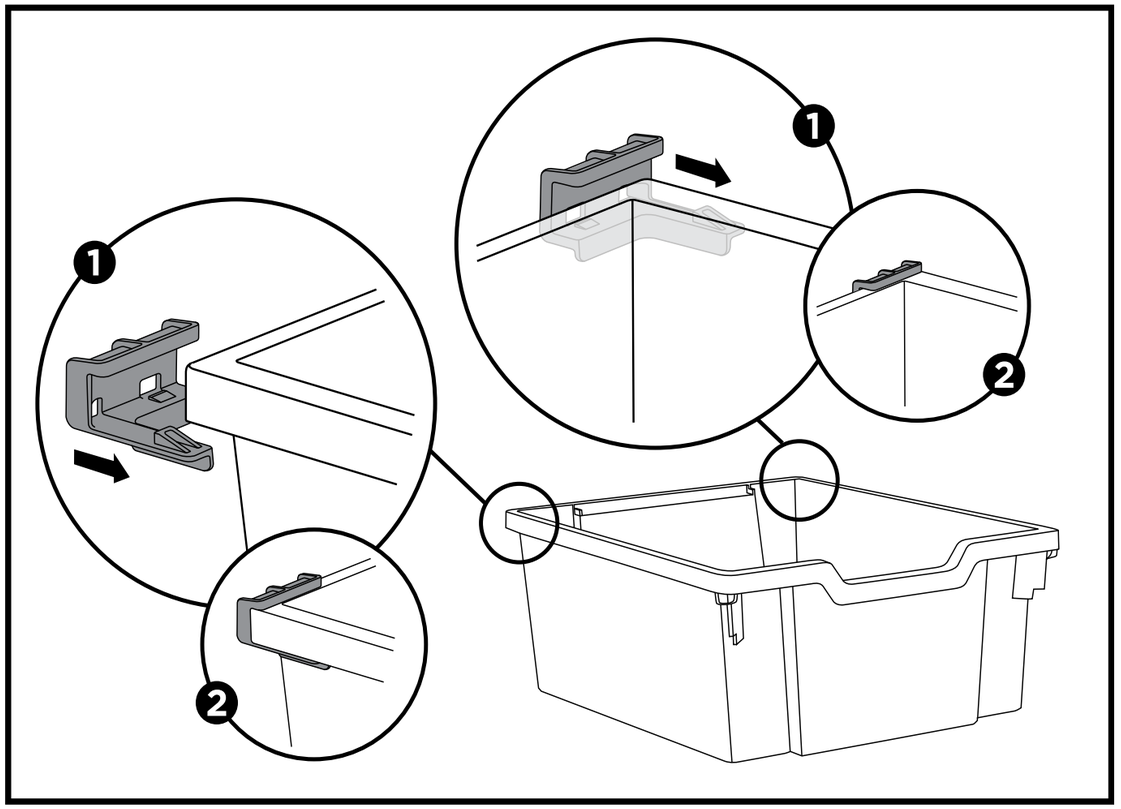

Custom callero
Storage with style.

Flat Shelf Unit

Dimensions: 995(H) x 1025(W) x 430mm(D).

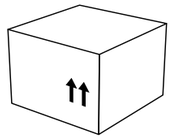

CFRA44 x 1
CFRM44 x 1
CFRH44 x 1

CFRA44

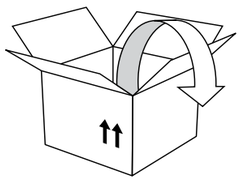

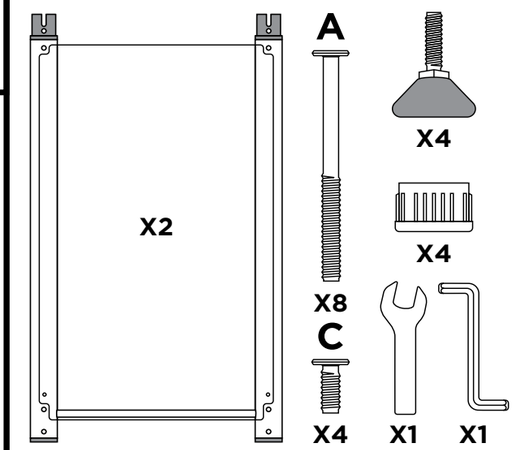

CFRH44

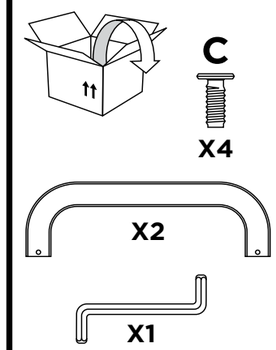

CFRM44

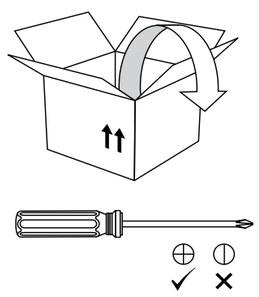

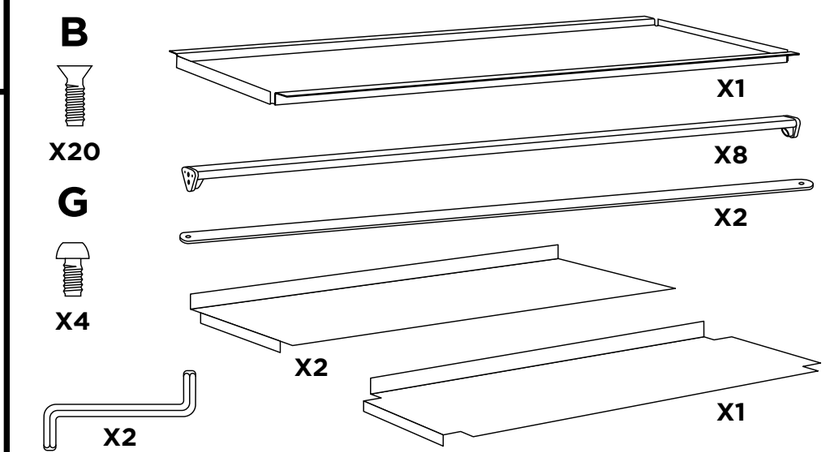

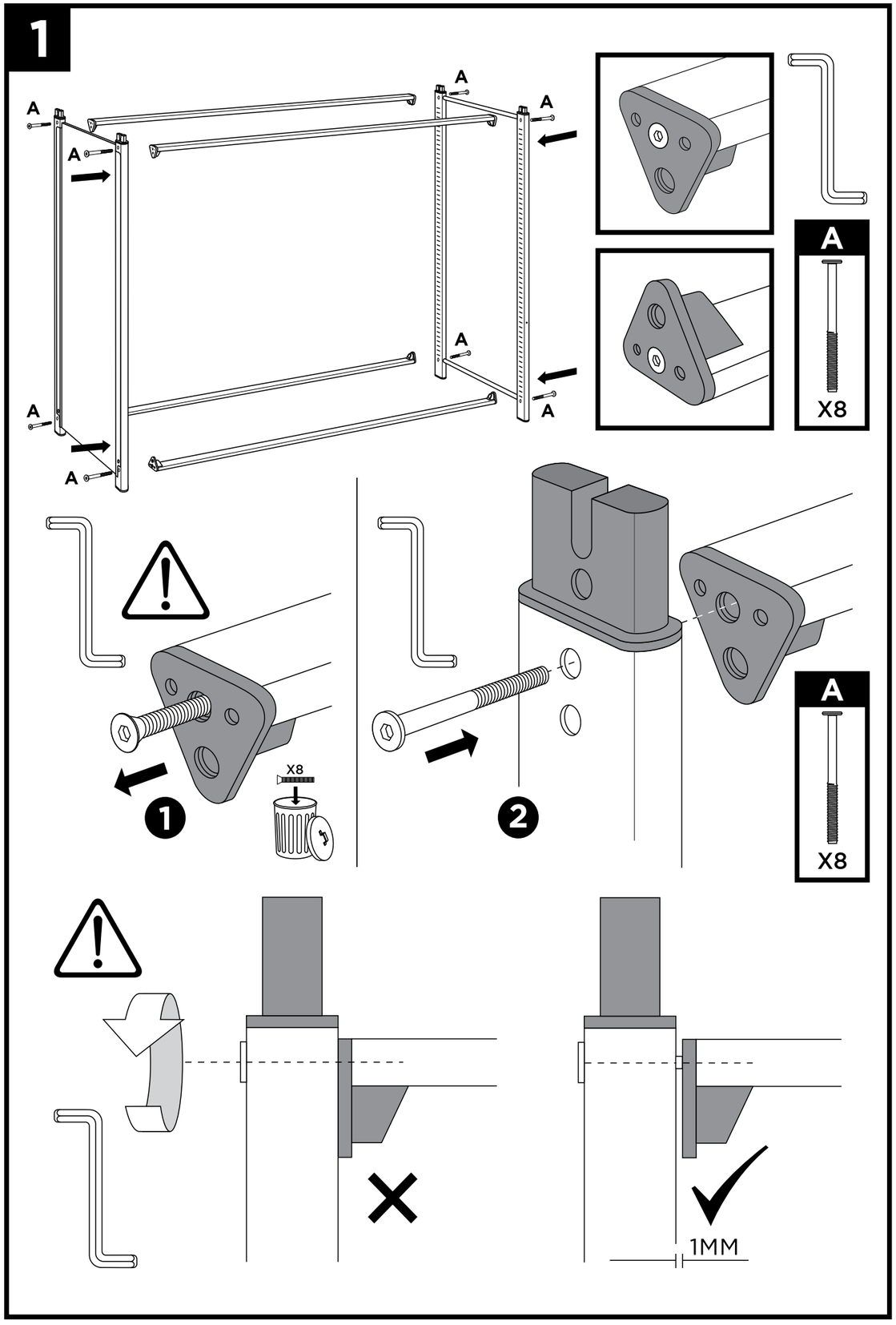
1
A
A
A
A
A
A
A
A
A
X8
X8
X8
1
2
1MM

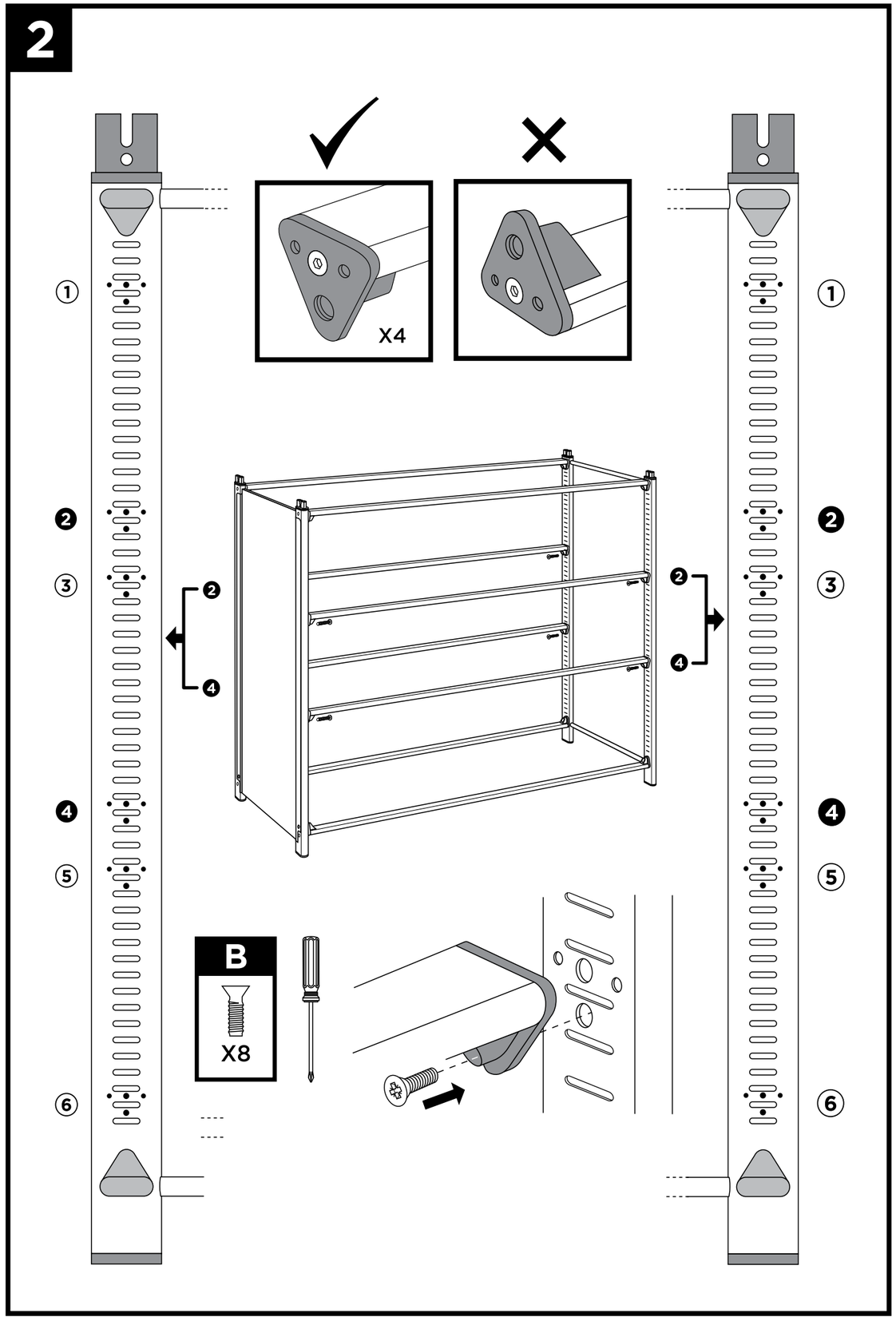
2
X4
B
X8
1
2
3
4
5
6

3

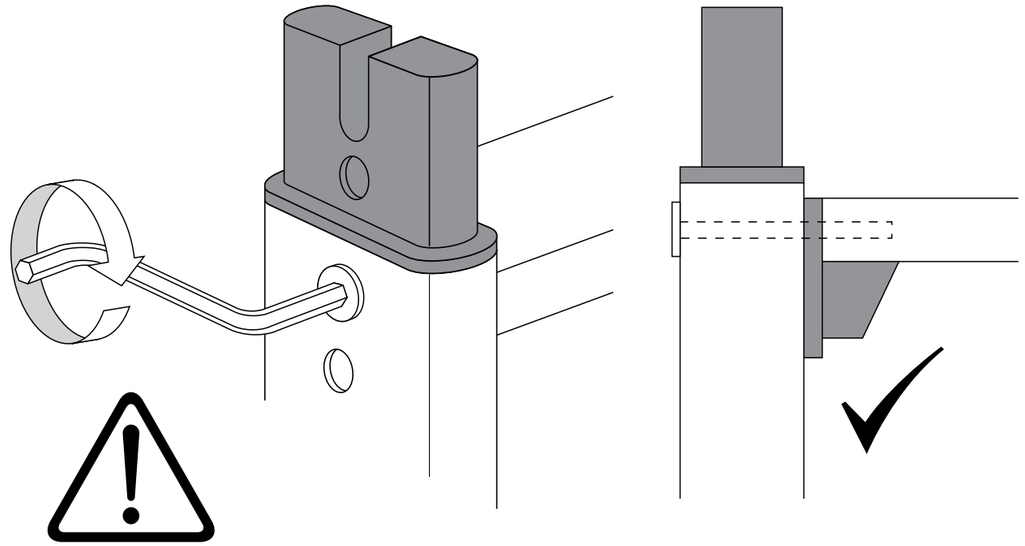

4

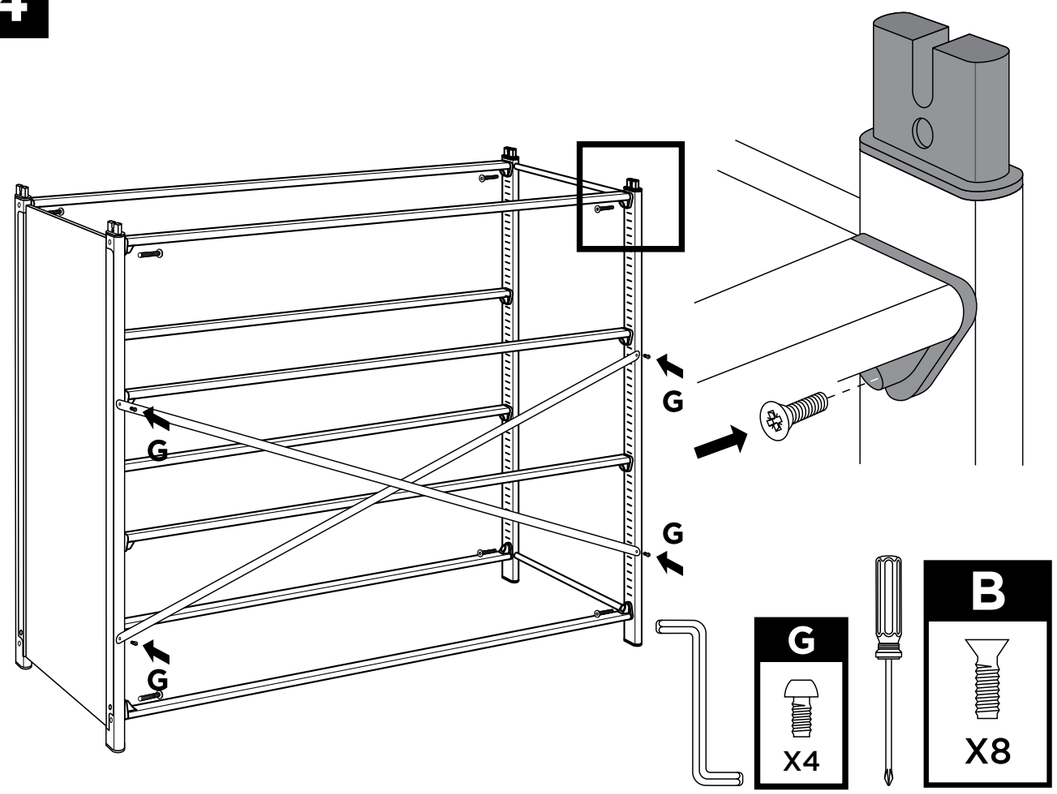

5

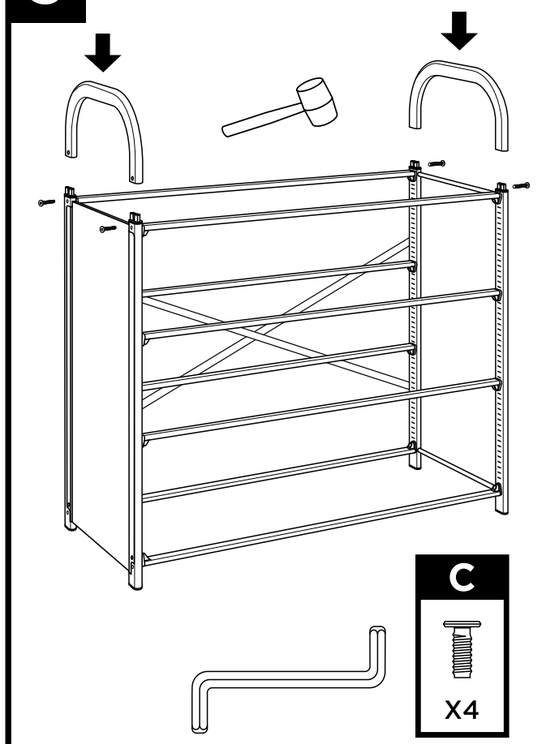

6

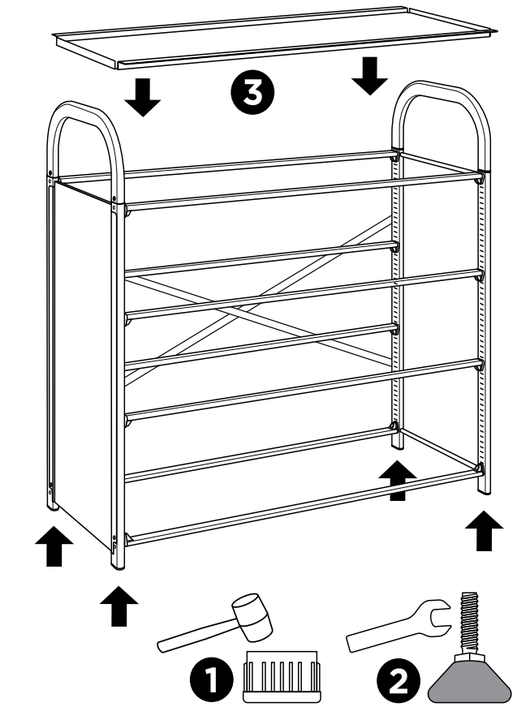

7

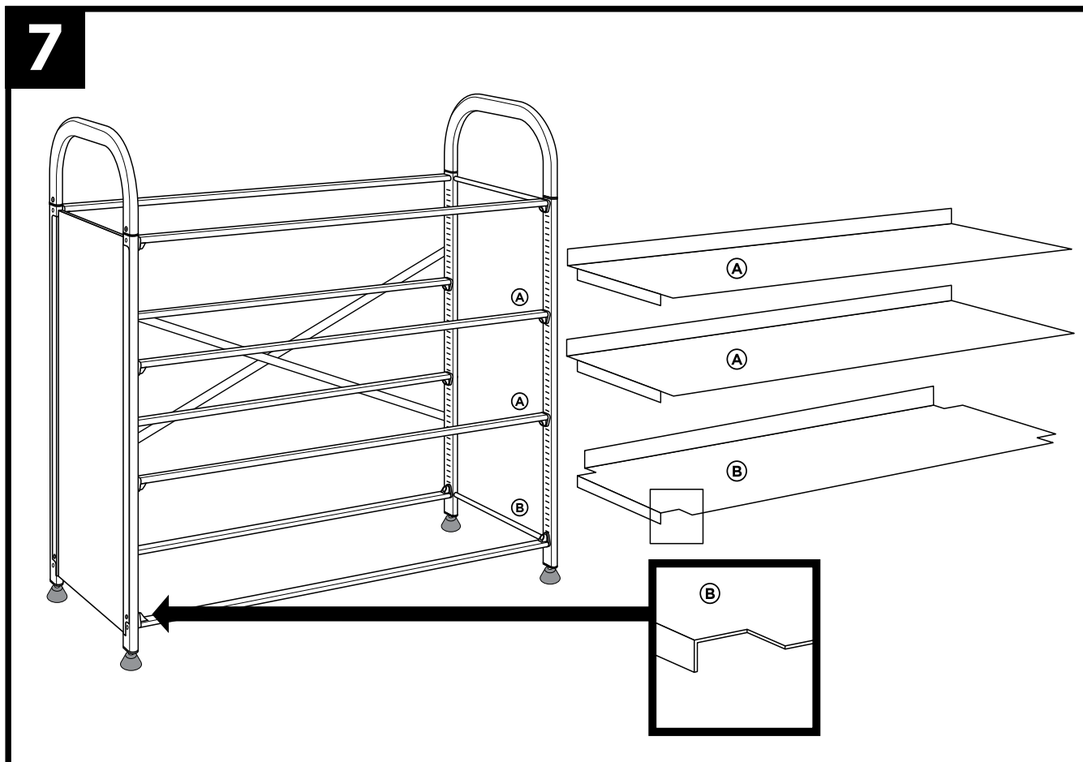

5

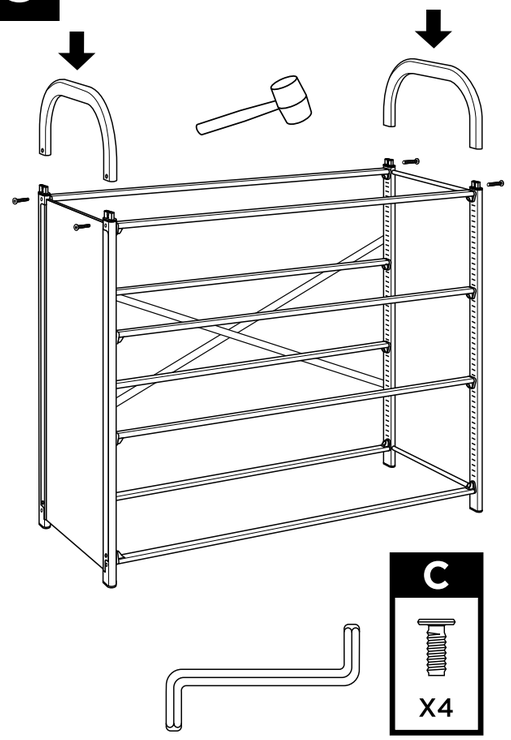

6

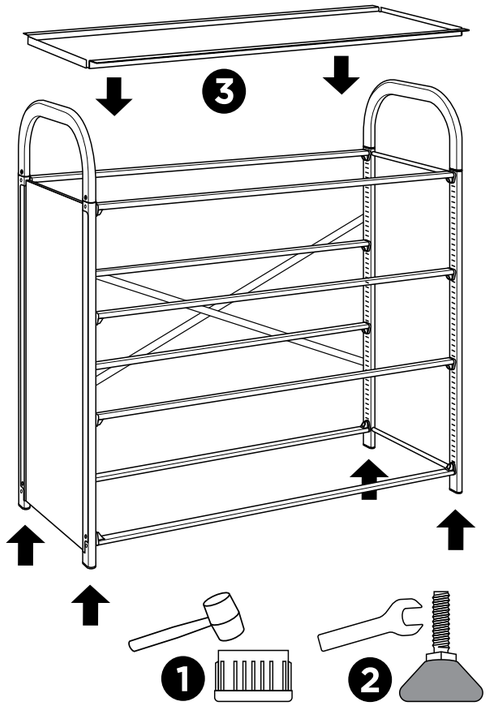

7

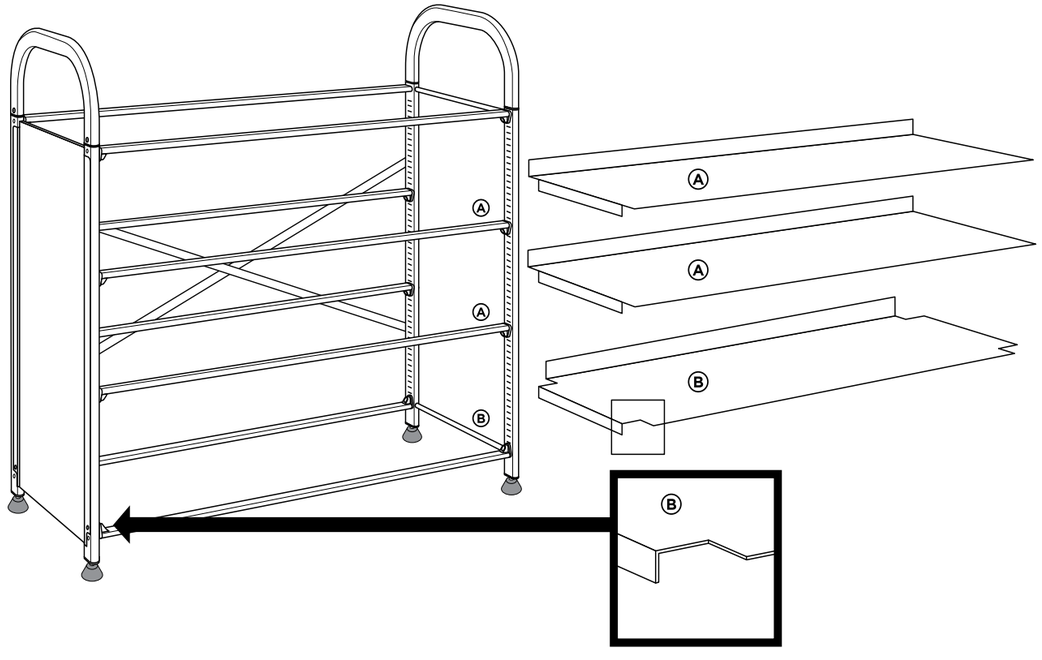

Custom callero

Storage with style.

Tilted Tray Unit

Dimensions: 995(H) x 1025(W) x 430mm(D).

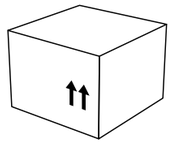

CFRA44 x 1
CFRD44 x 1
CFRH44 x 1

CFRA44

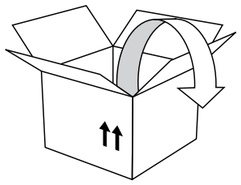

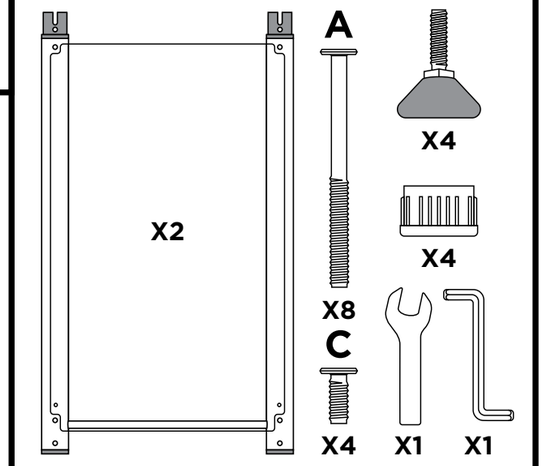

CFRH44

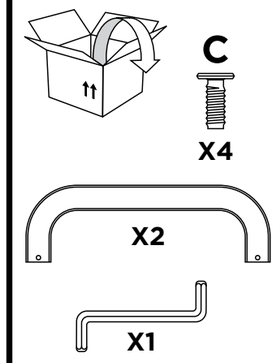

CFRD44

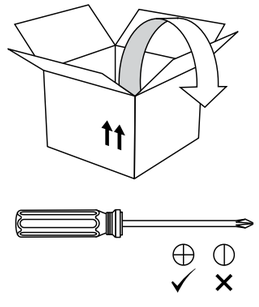

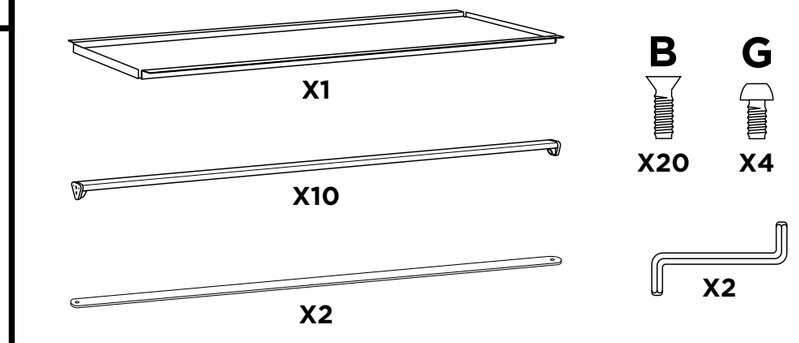

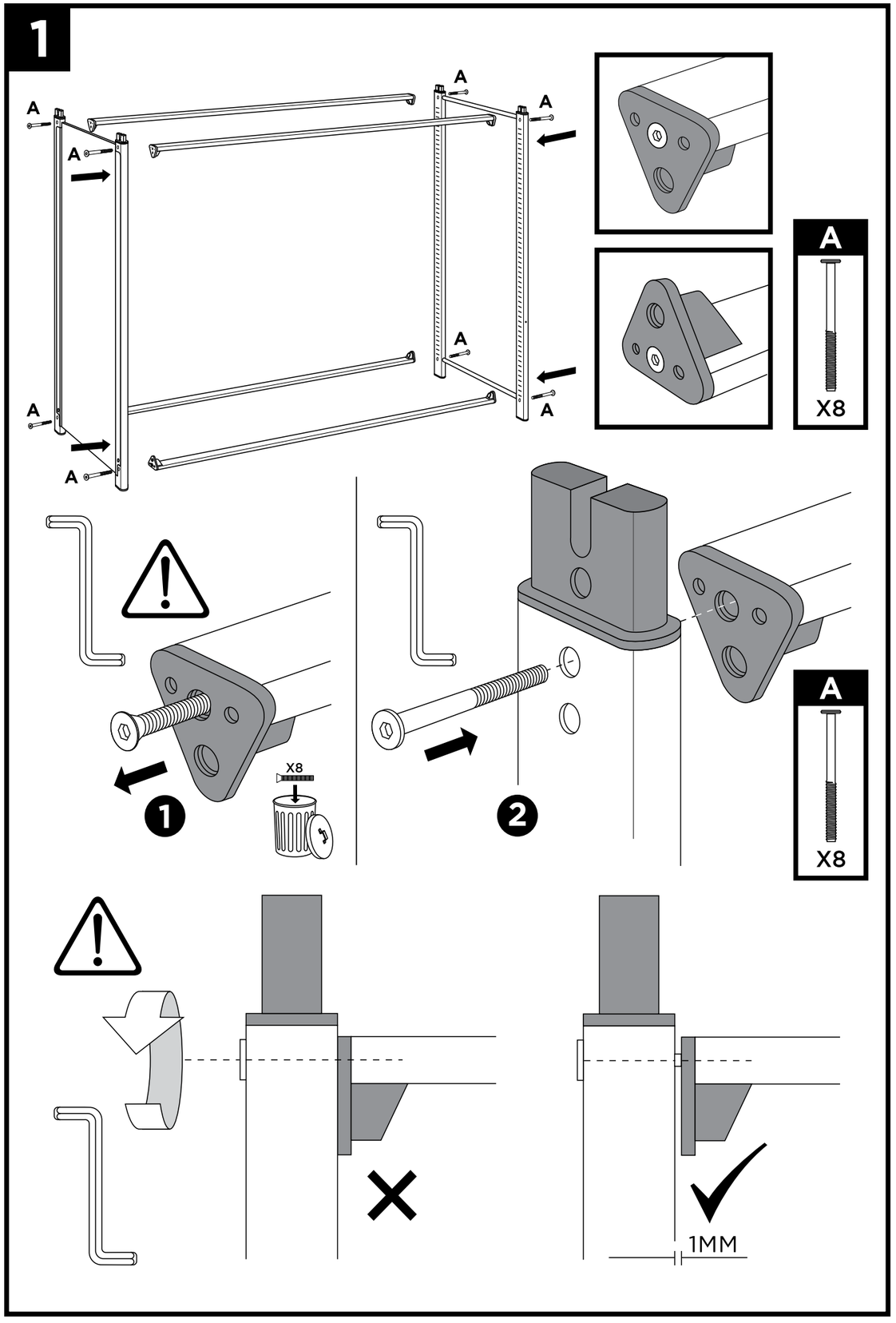
1
A
A
A
A
A
A
A
A
A
X8
X8
X8
1
2
1MM

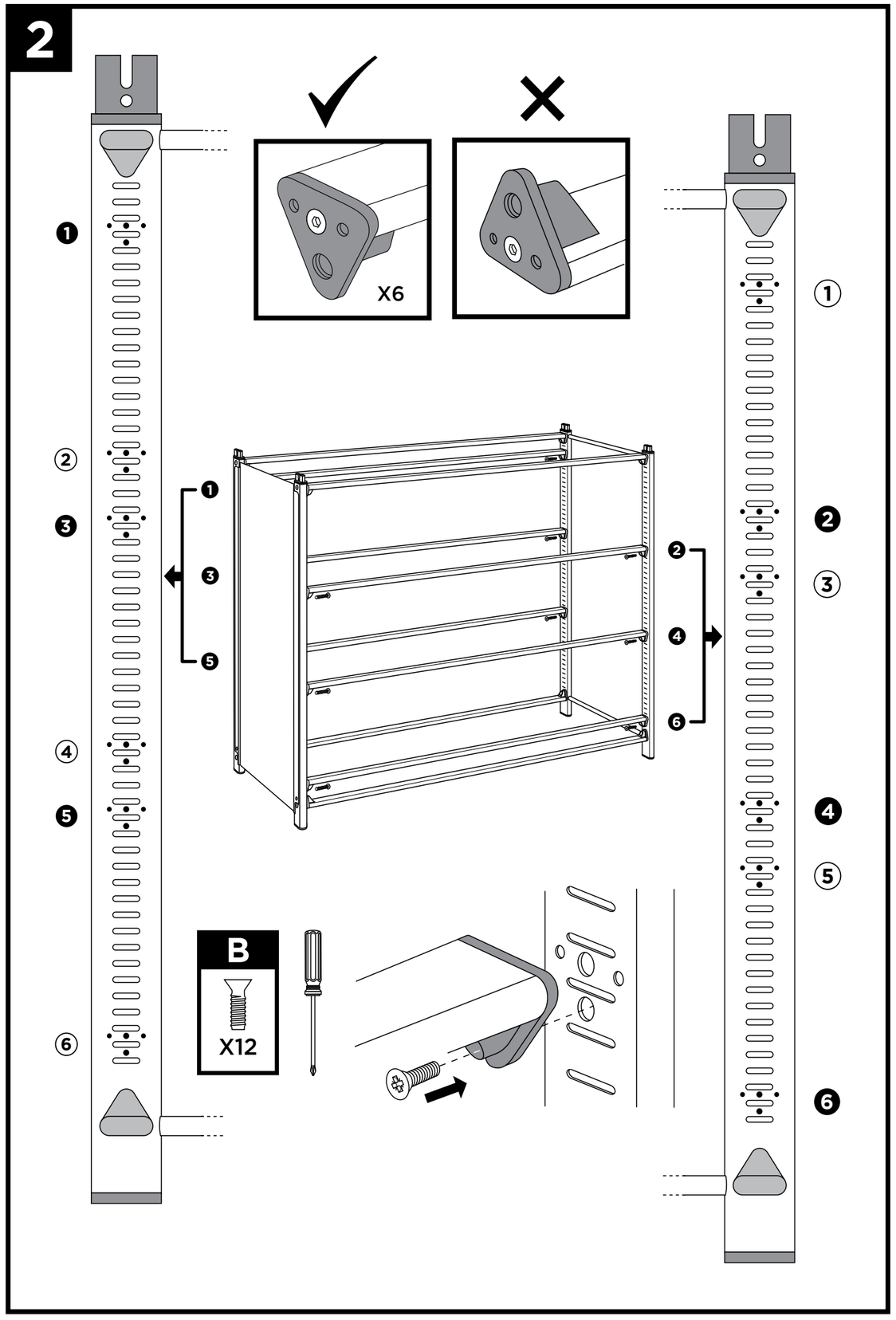
2
X6
B
X12
1
2
3
4
5
6

3

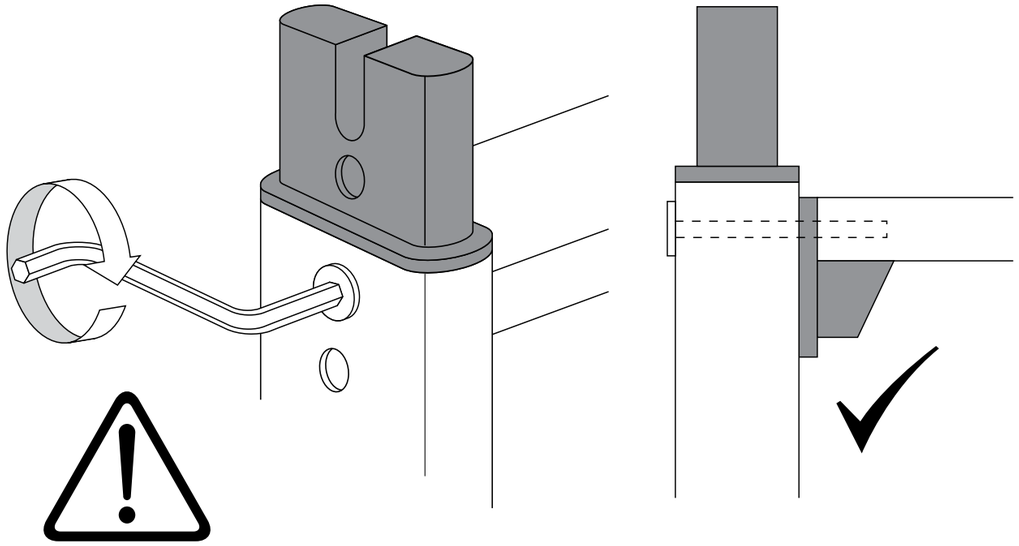

4

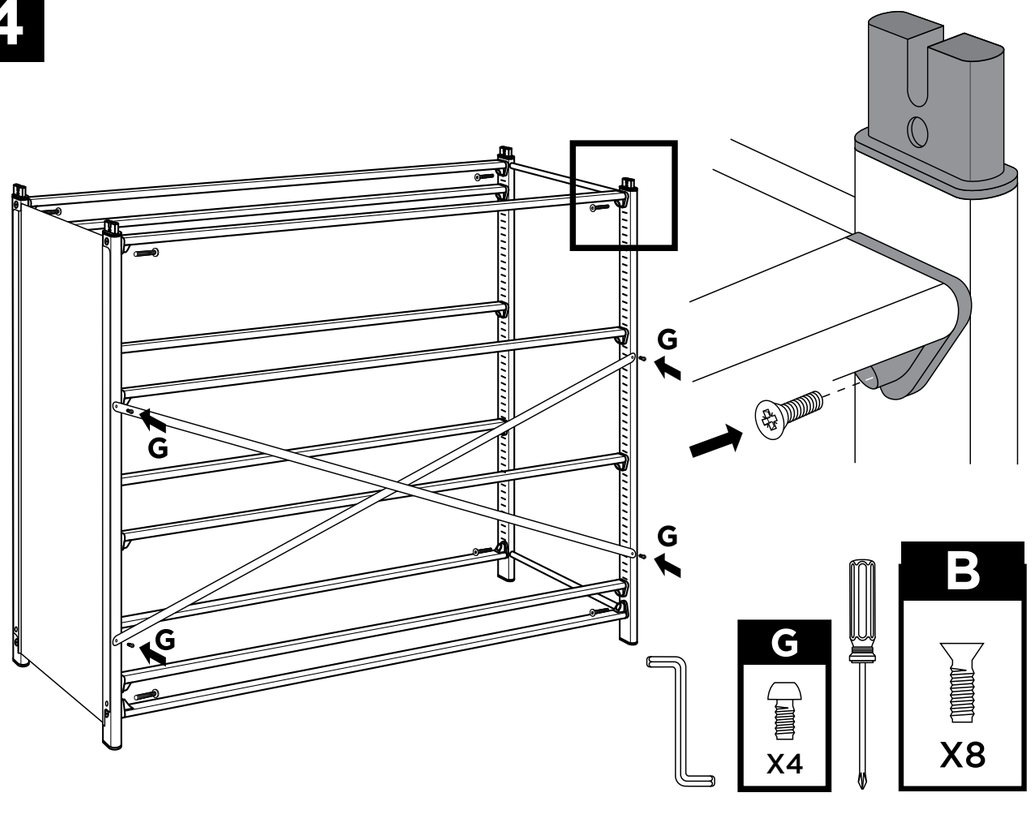

5

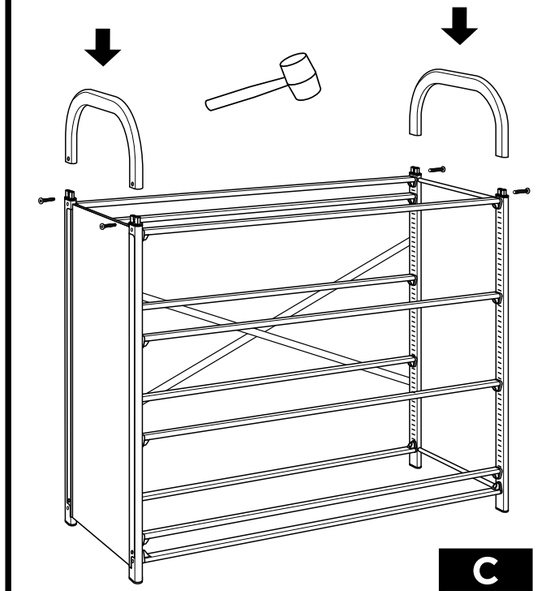

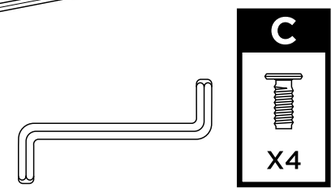

6

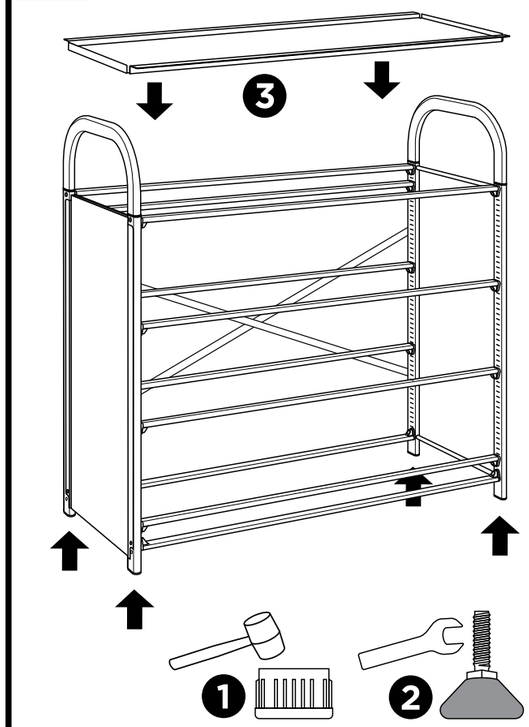

Custom
callero
Storage with style.

Tilted Shelf Unit

Dimensions: 995(H) x 1025(W) x 430mm(D).

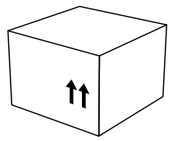

CFRA44 x 1
CFRE44 x 1
CFRH44 x 1

CFRA44

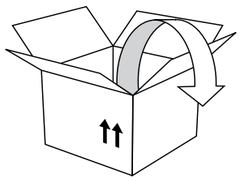

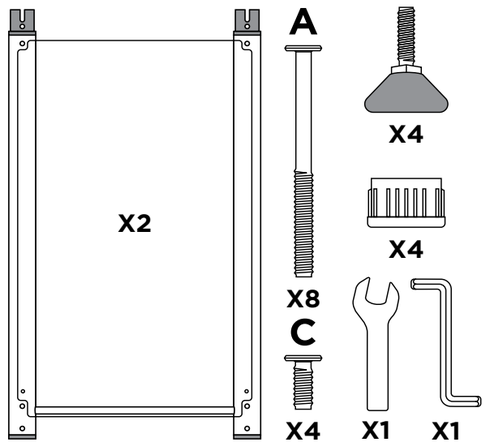

CFRH44

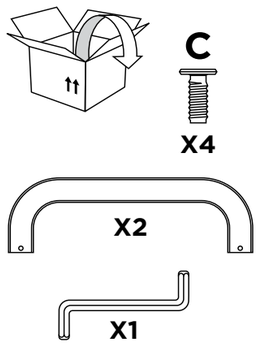

CFRE44

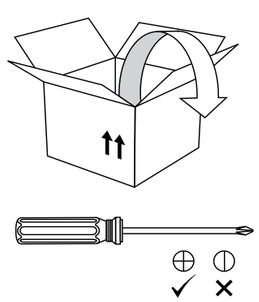

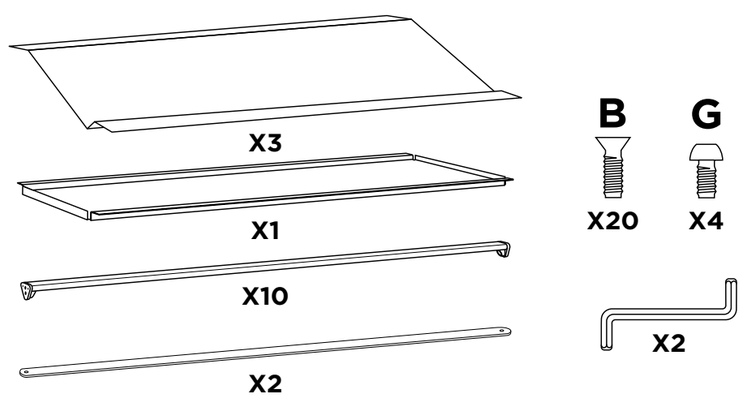

1

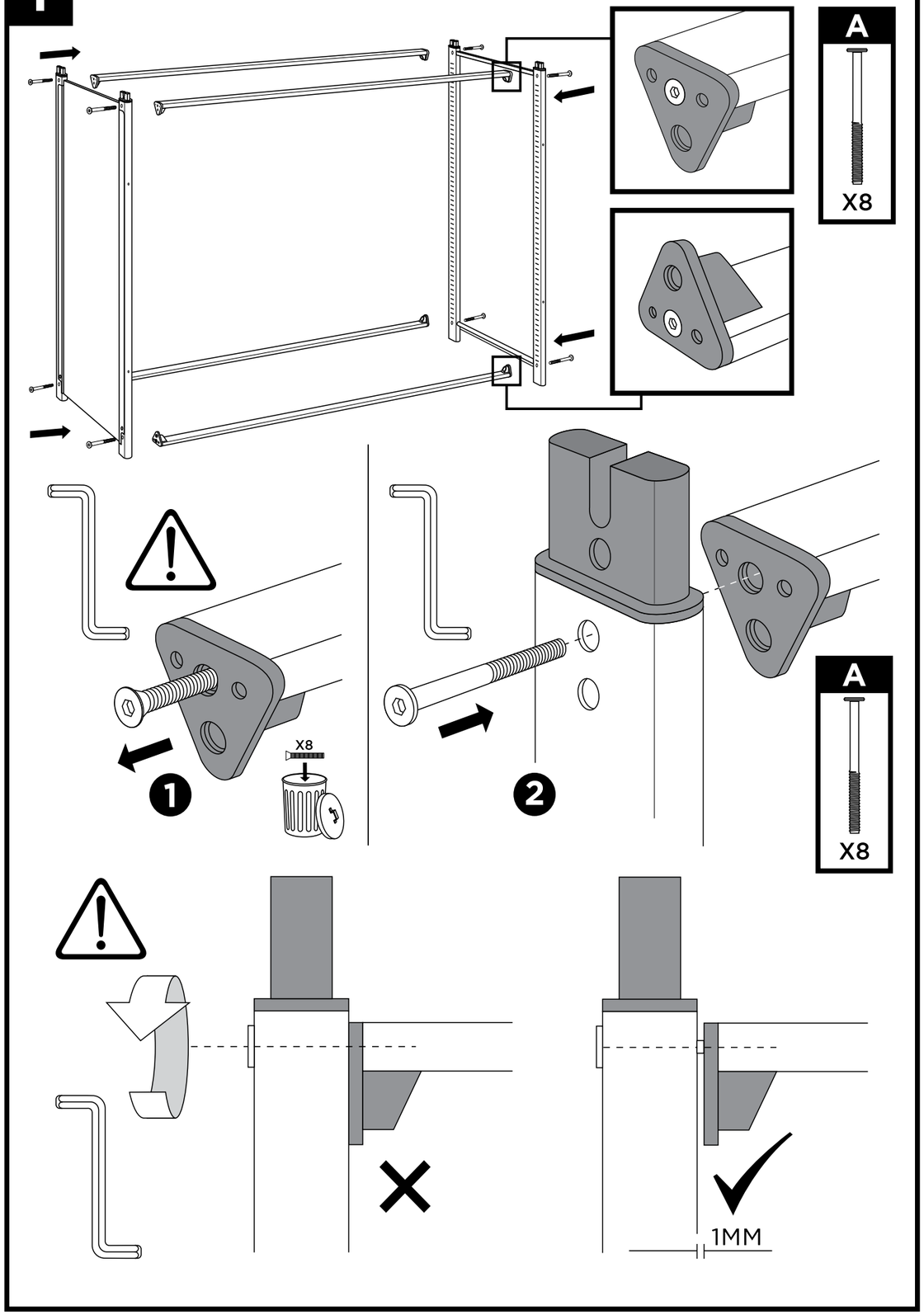

2

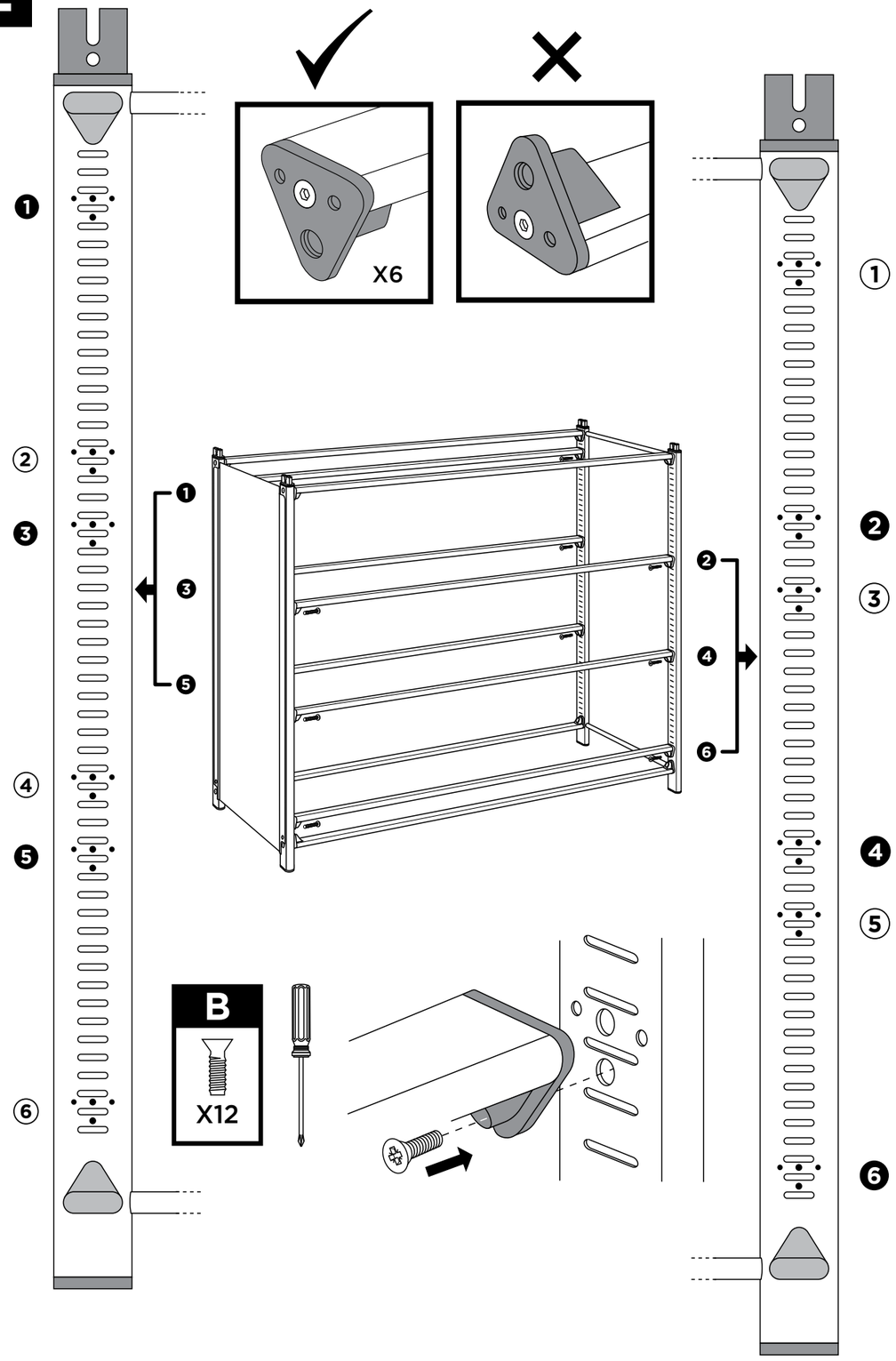

3

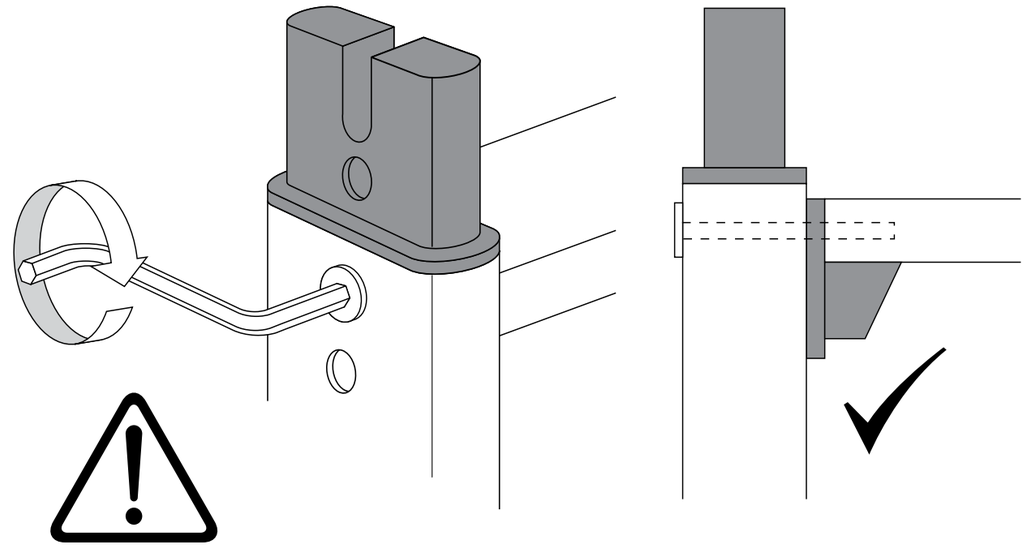

4

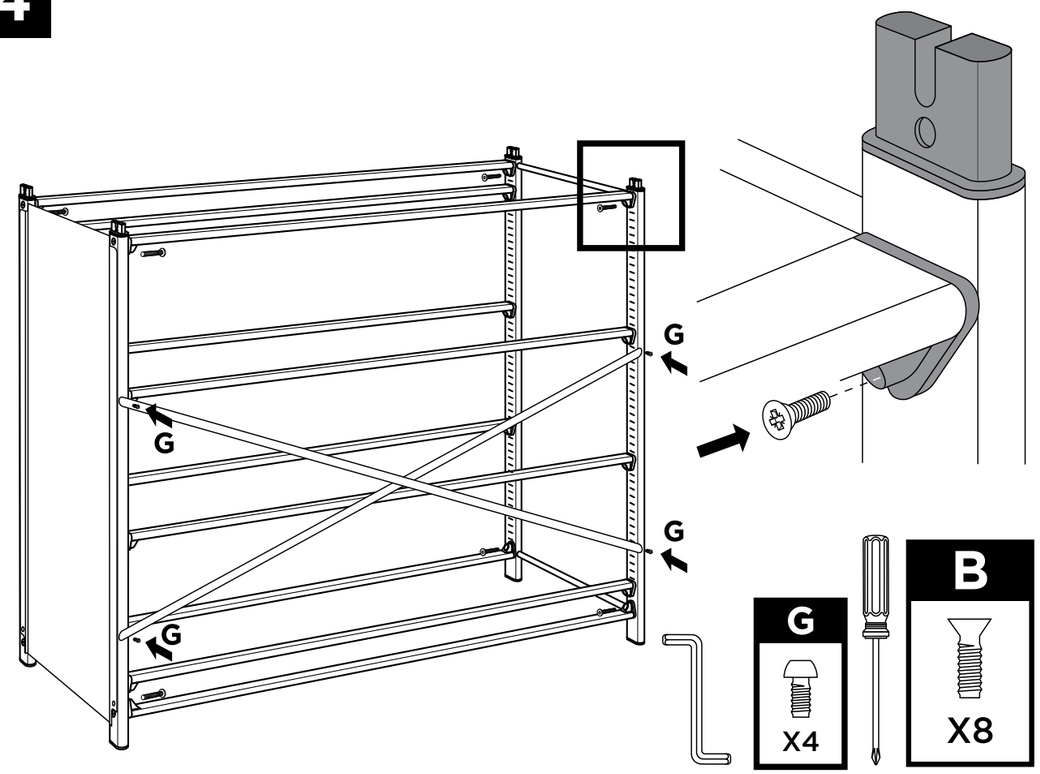

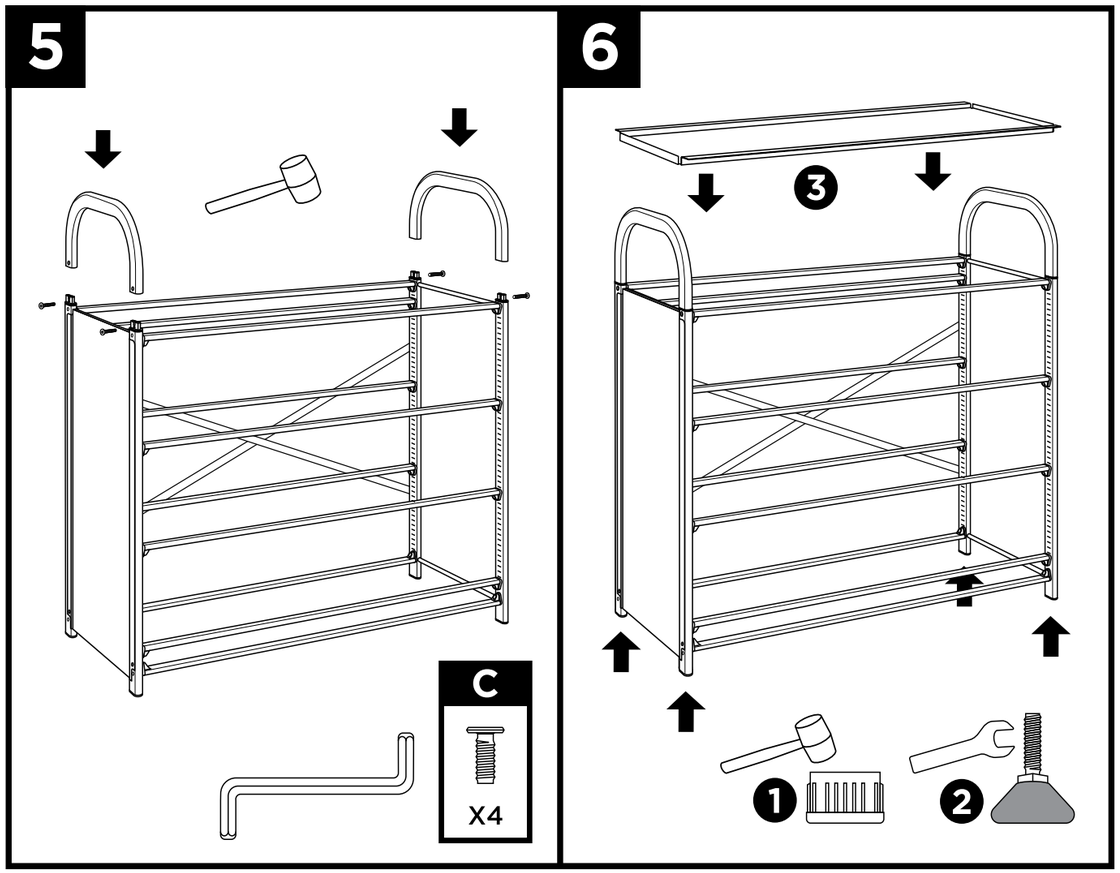

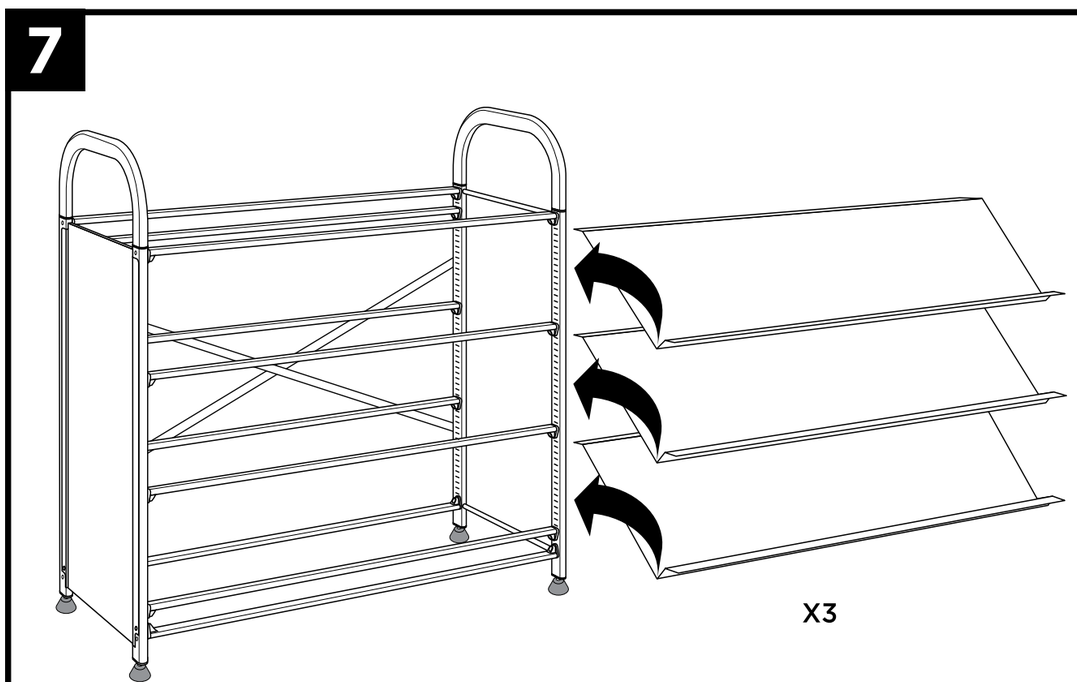

Custom callero

Storage with style.

Maker Unit

Dimensions: 995(H) x 1025(W) x 430mm(D).

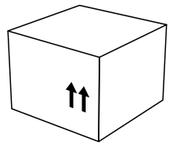

CFRA44 x 1
CFRN44 x 1
CFRH44 x 1

CFRA44

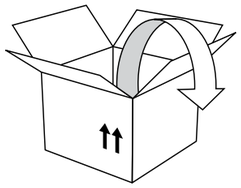

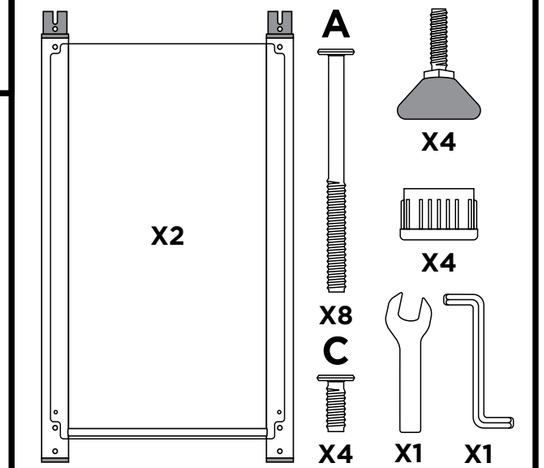

CFRH44

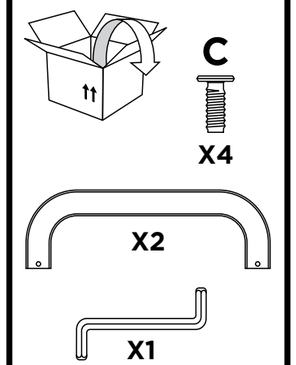

CFRN44

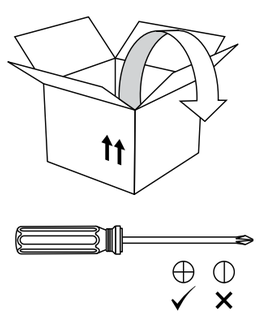

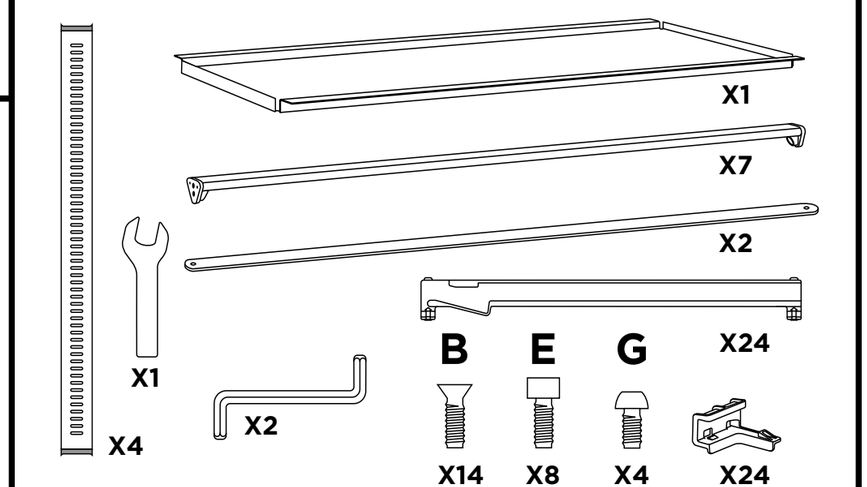

1

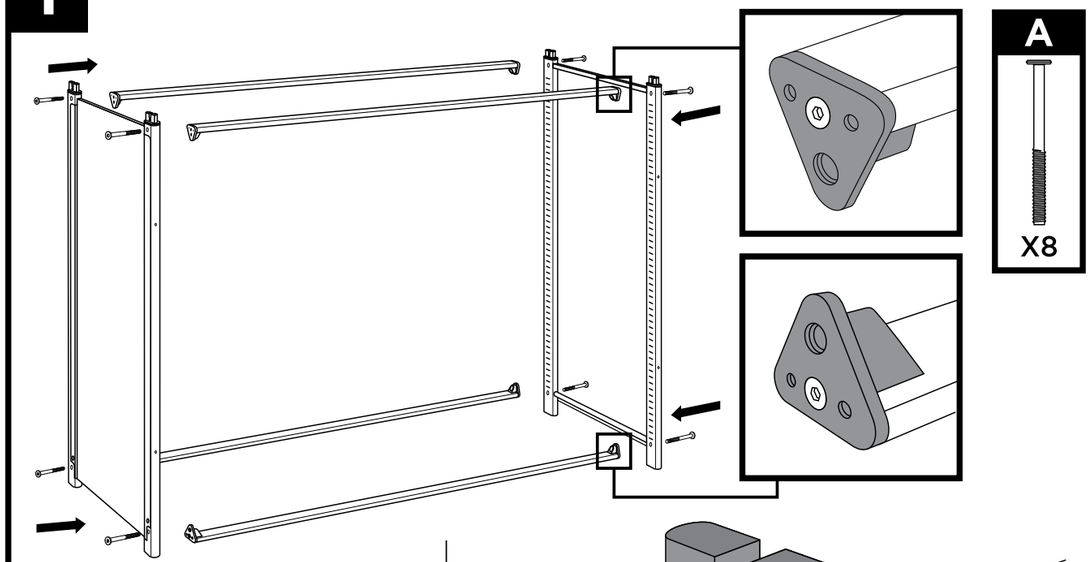

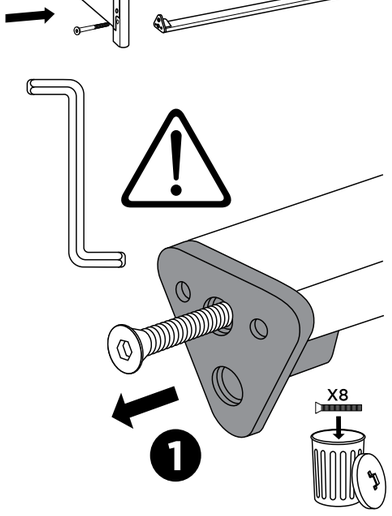

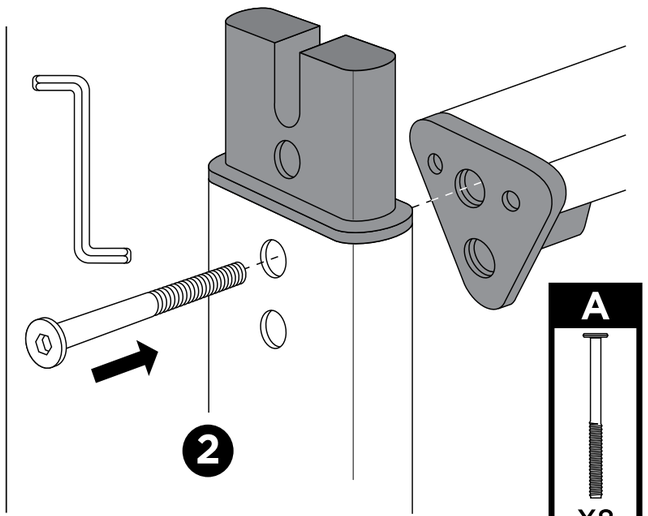

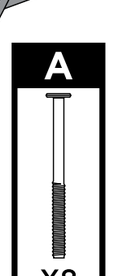

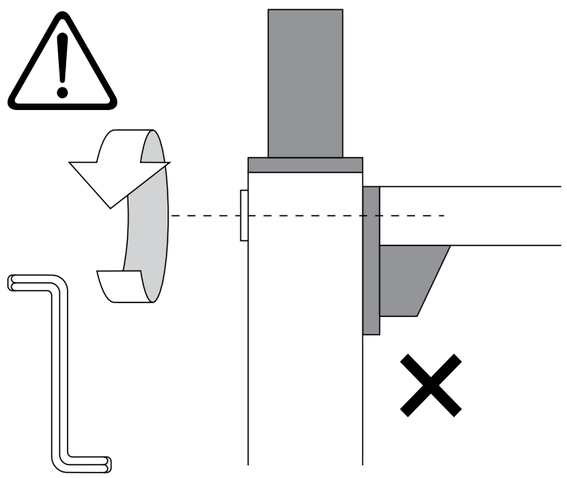

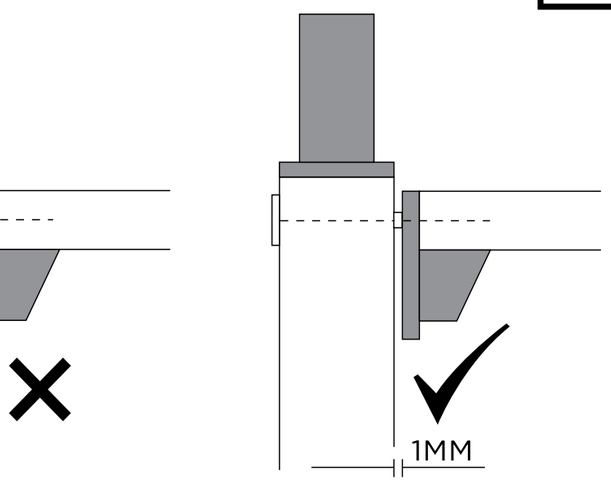

2

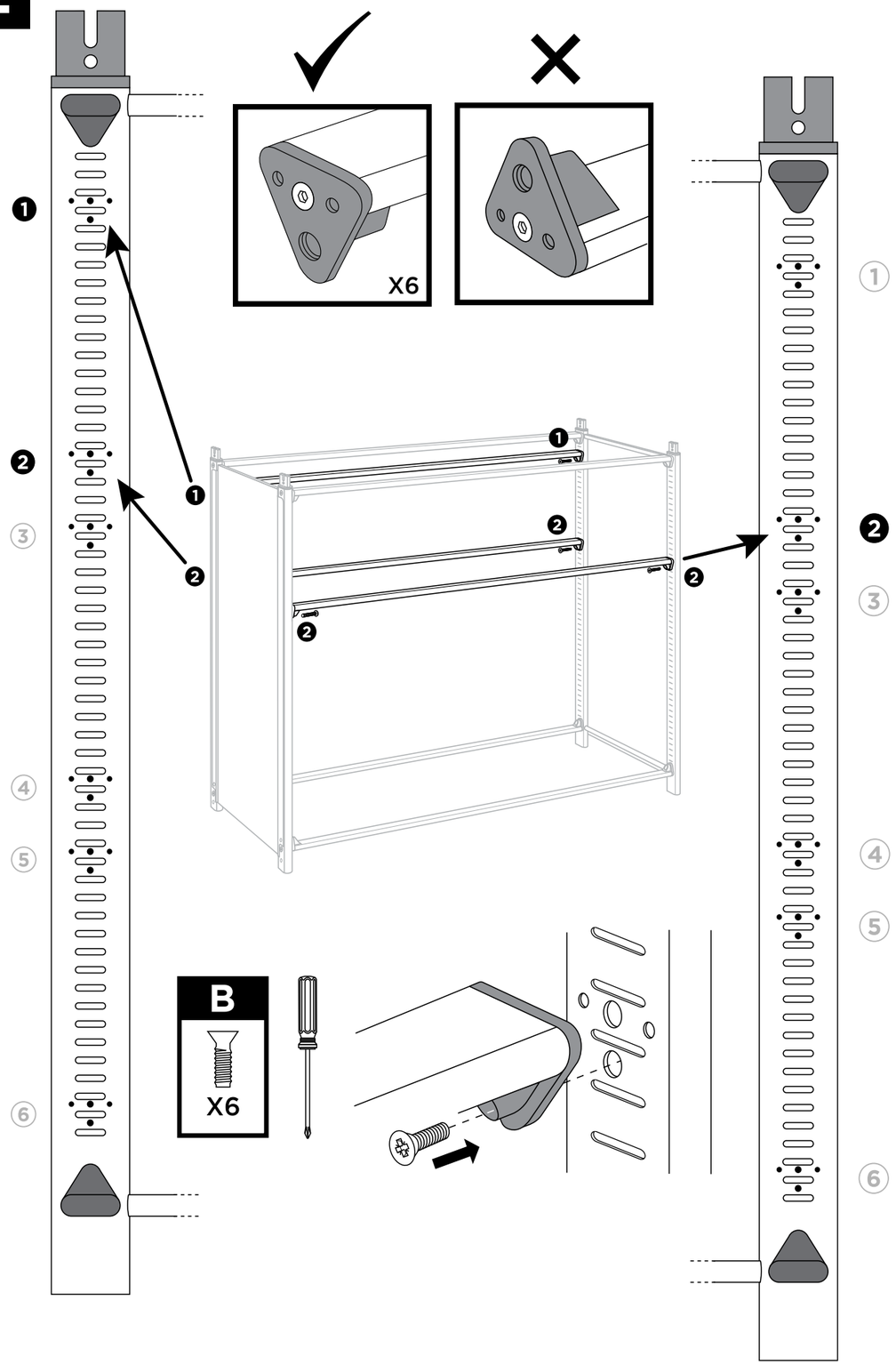

3

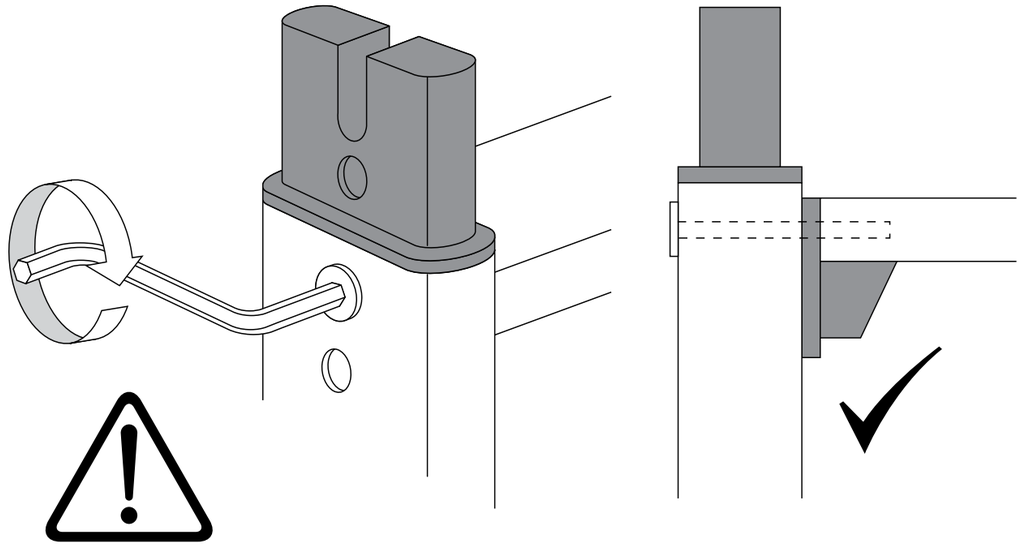

4

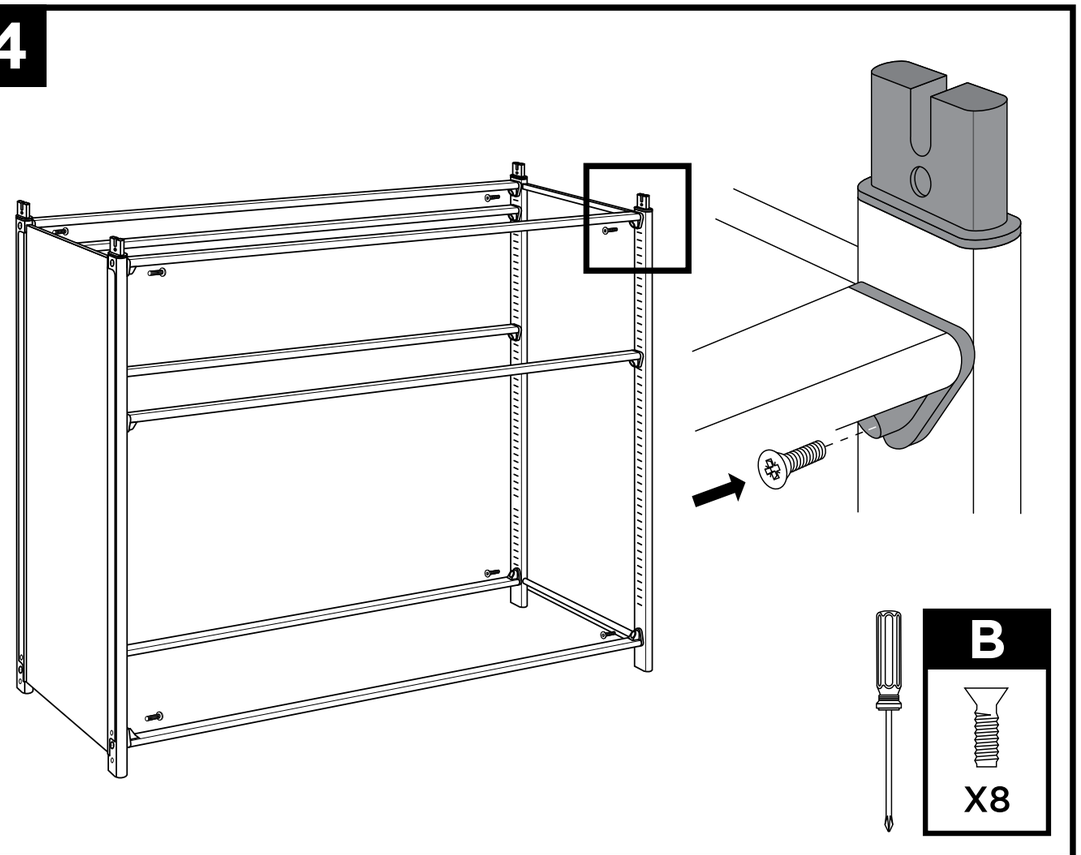

5

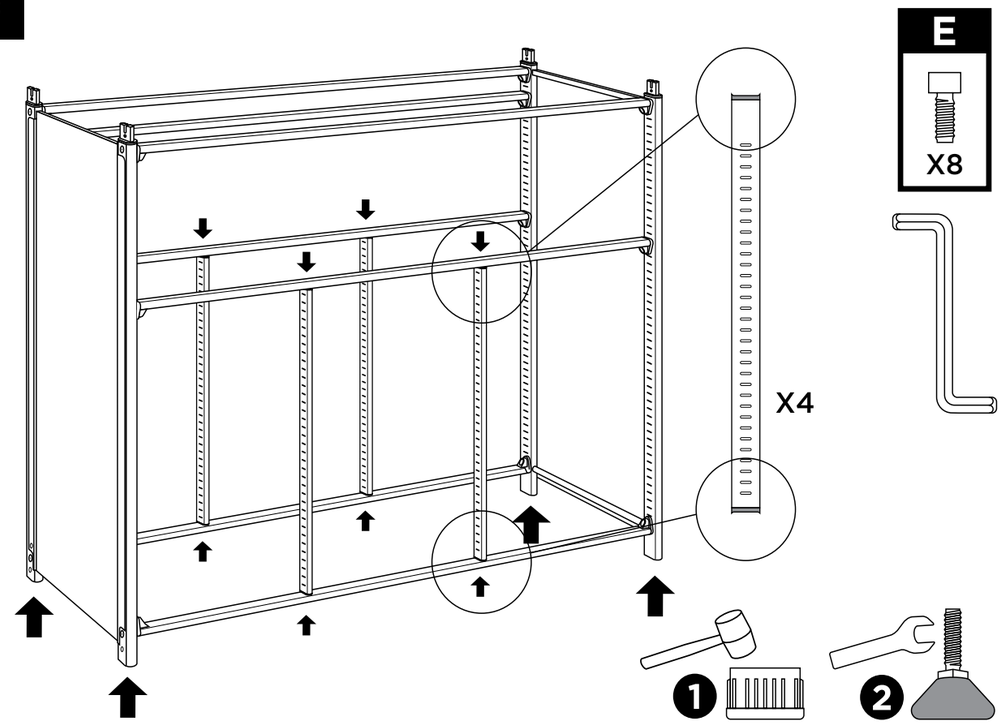

6

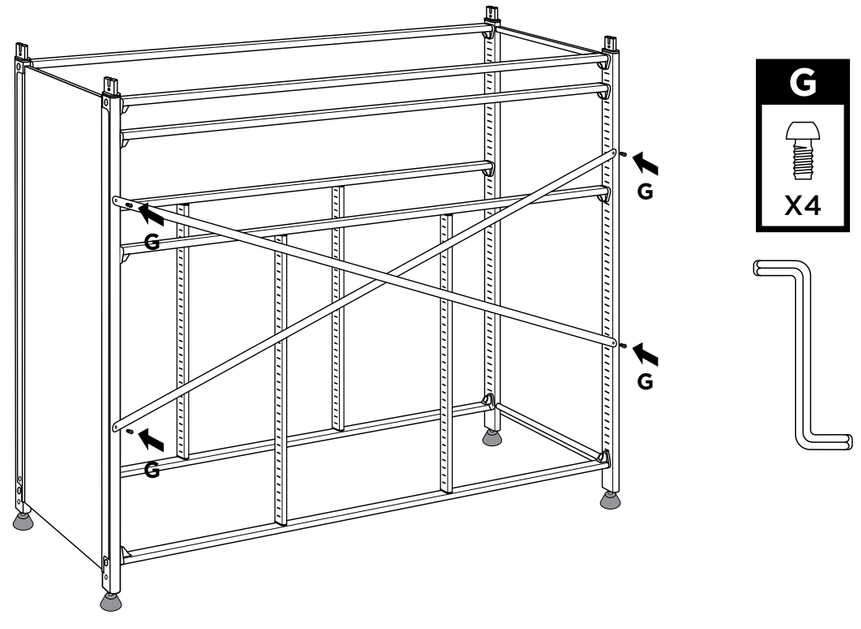

7

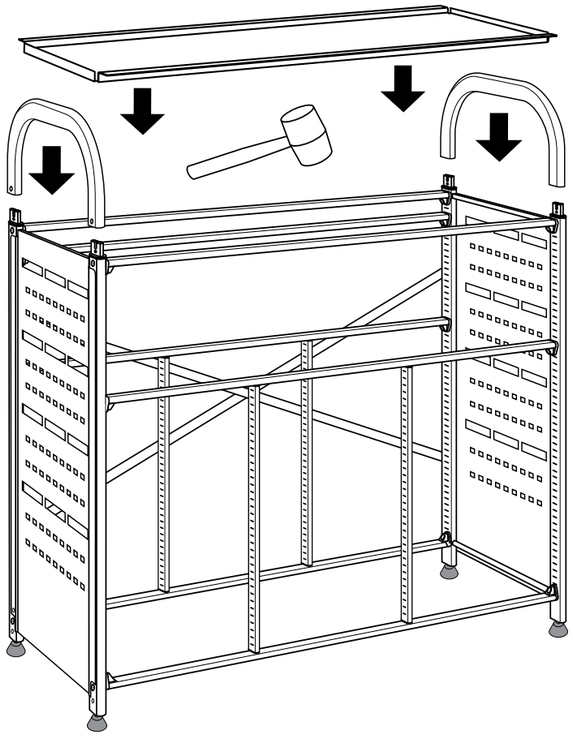

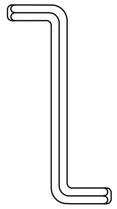

C

X4

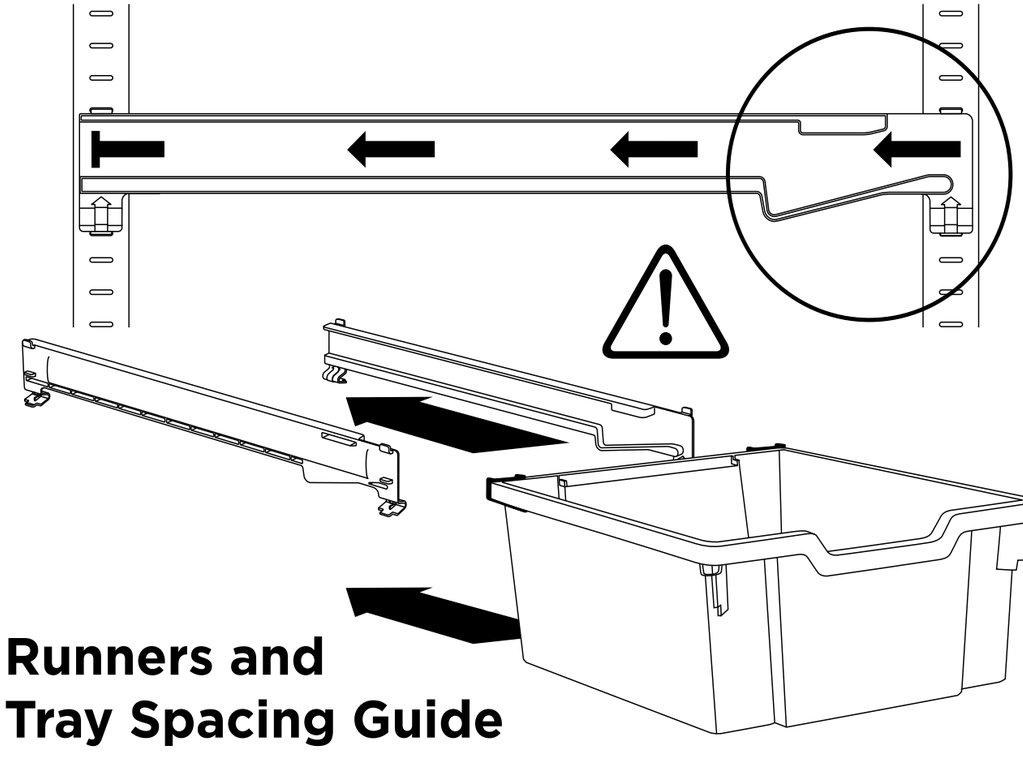

Runners and Tray Spacing Guide

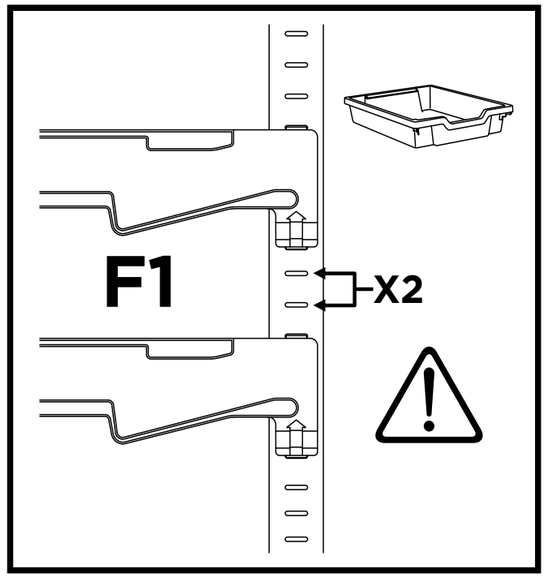

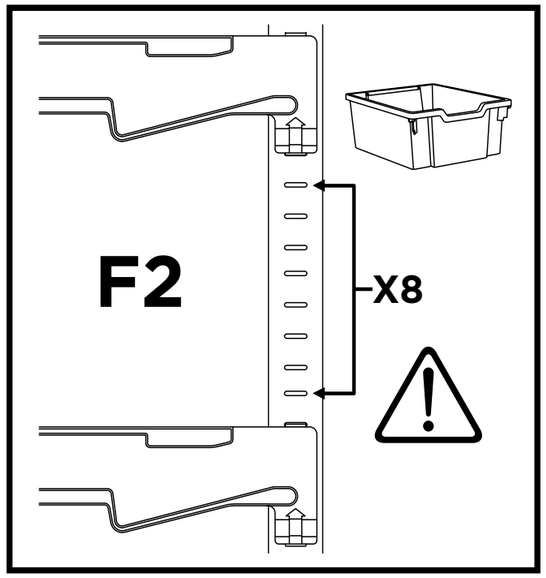

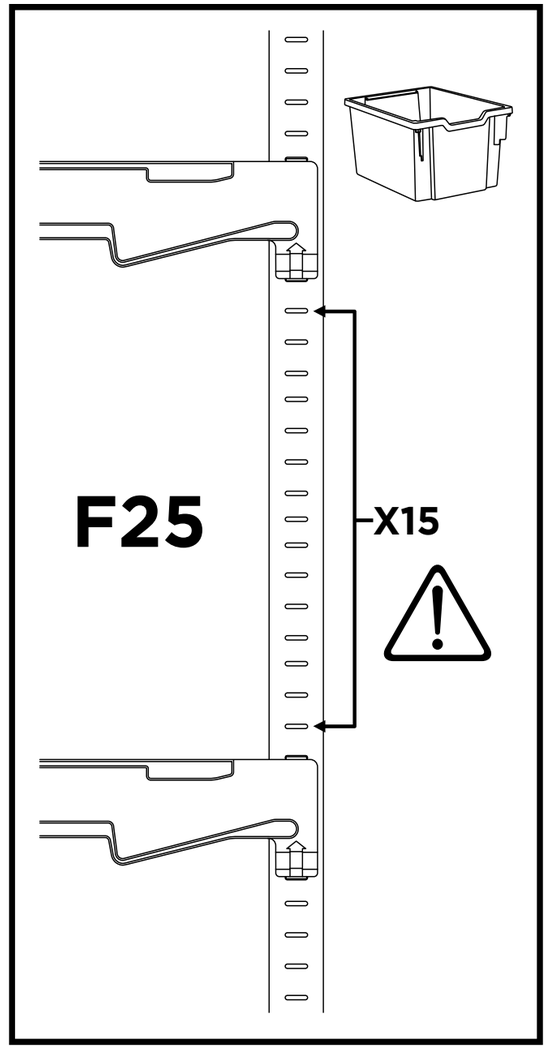

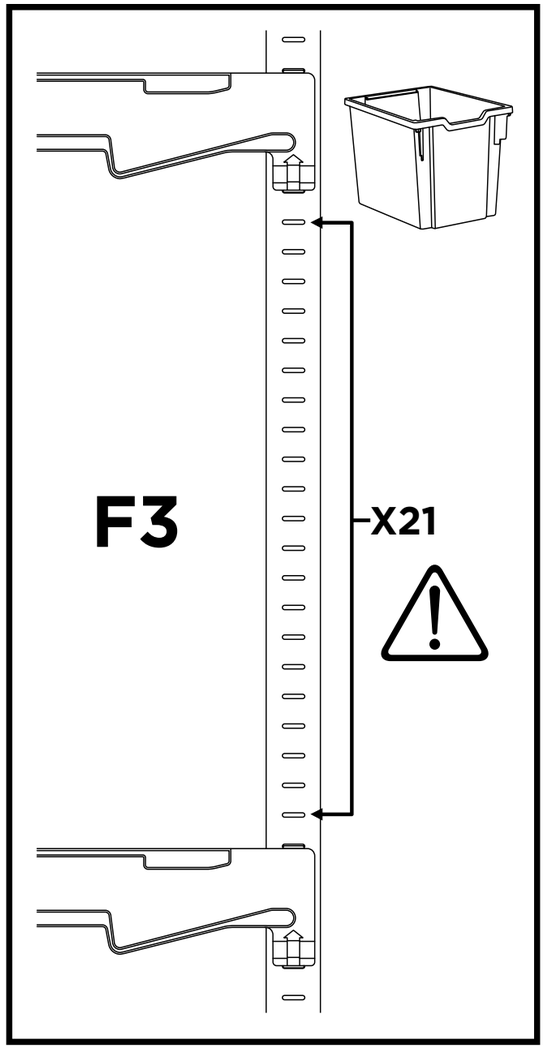

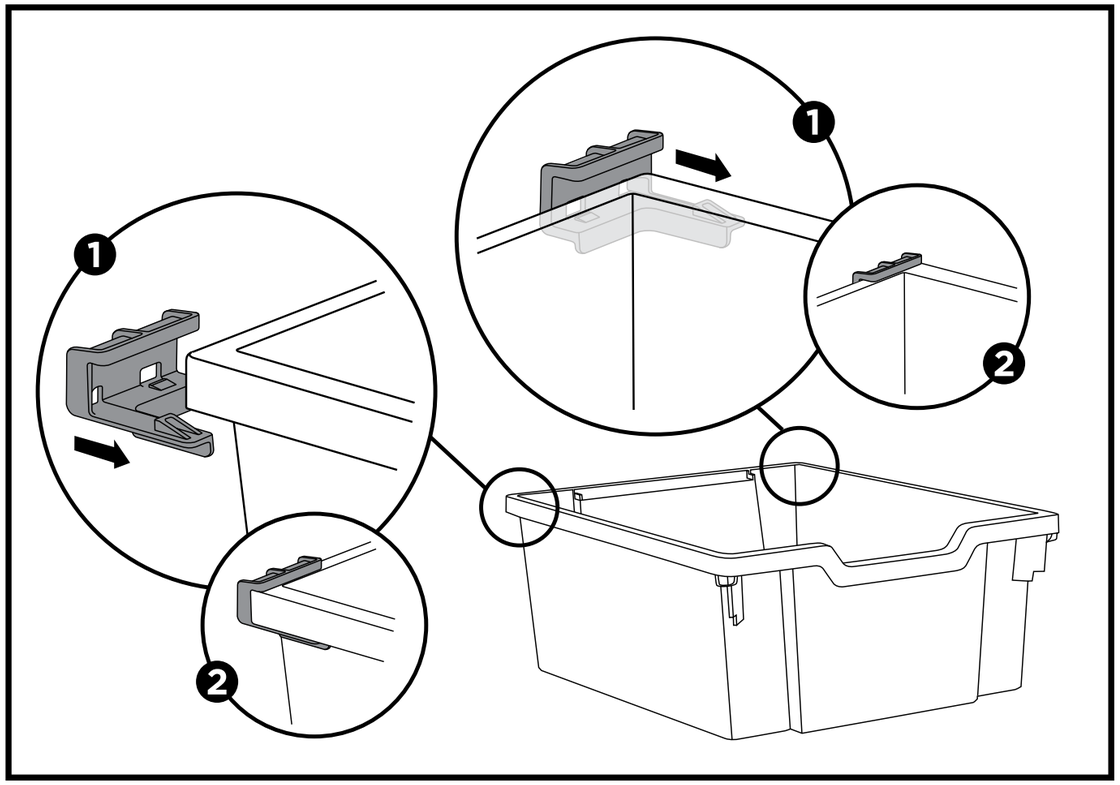

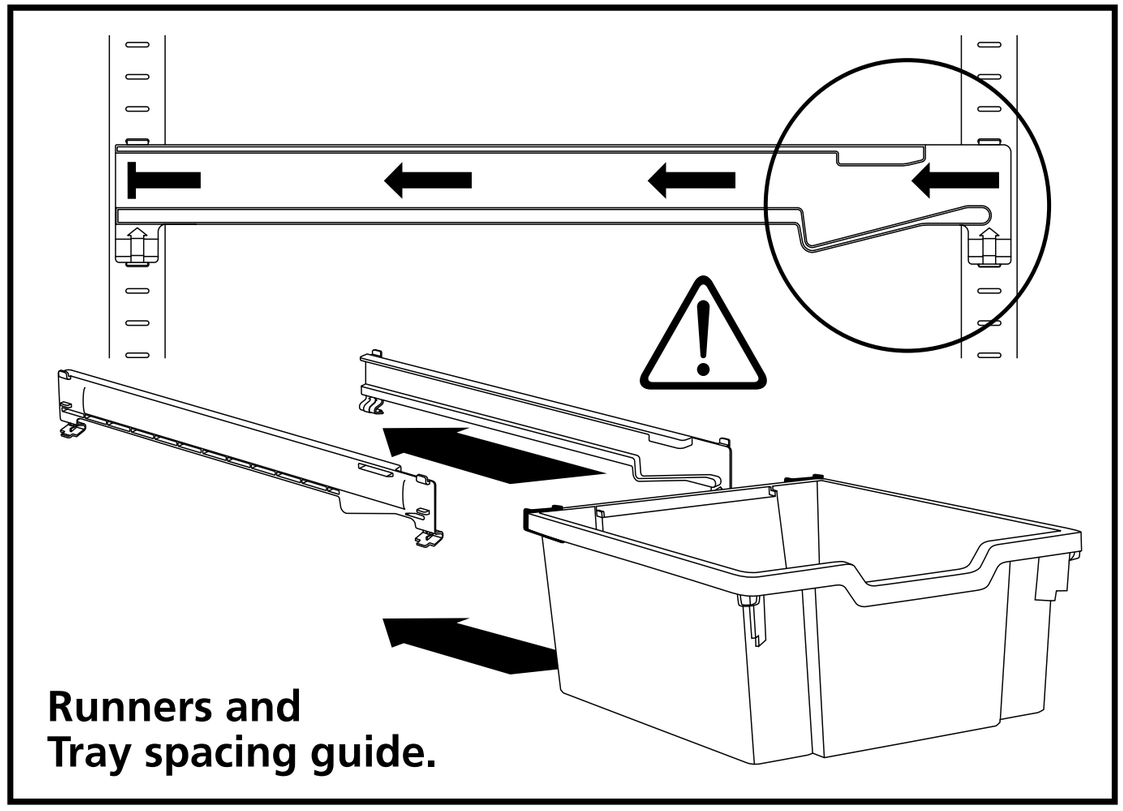
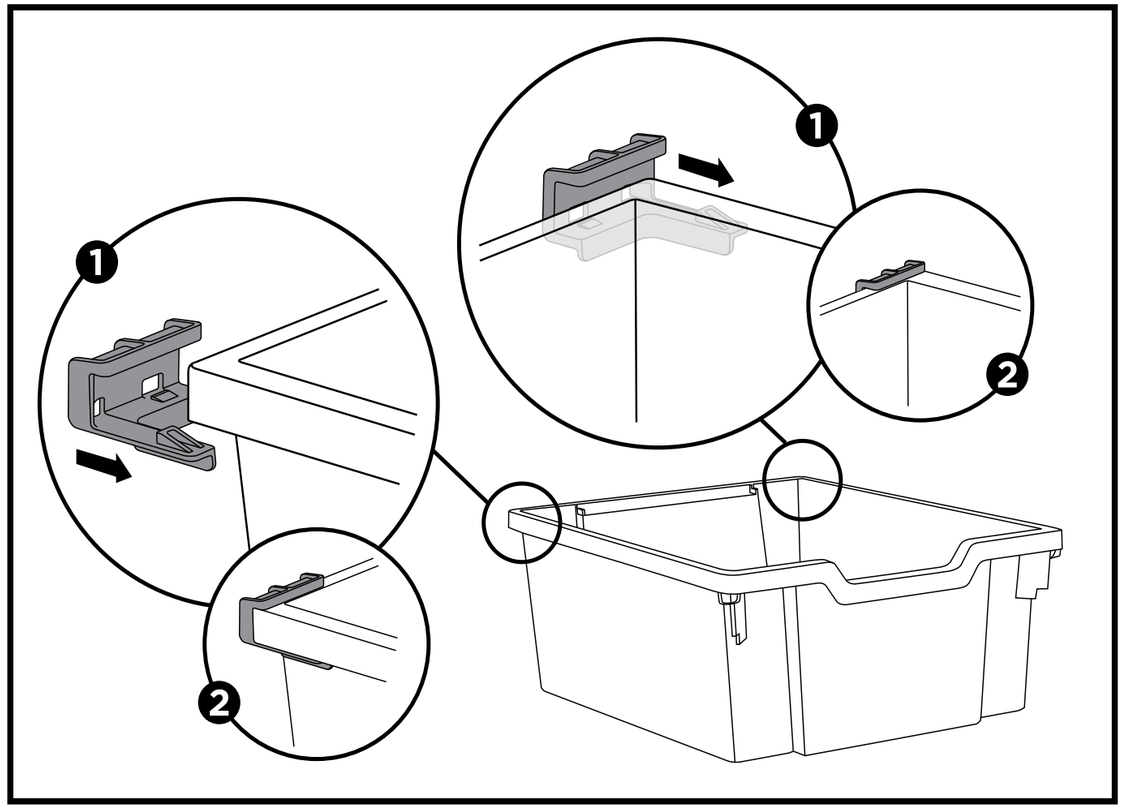
Runners and
Tray spacing guide.